BRITISH STANDARD

BS EN 1176-1:2008

Incorporating corrigendum August 2008

Playground equipment and surfacing —

Part 1: General safety requirements and test methods

ICS 97.200.40

British Standards

National foreword

This British Standard is the UK implementation of EN 1176-1:2008. It supersedes BS EN 1176-1:1998 which will be withdrawn on 31 May 2009.

The UK participation in its preparation was entrusted to Technical Committee SW/65, Children's playground equipment.

Attention is drawn to BS EN 1176-1:2008, Clause **4.2.8.5.2** Note 1 and the use, within the UK, of natural grass as playground surfacing. The UK committee, following representation from the national Play Safety Forum, offer the subsequent guidance. This guidance is drawn from the experiences of the UK committee, and the experiences of other European organizations, in the application of BS EN 1176-1:1998 over the past ten years.

Grass is a low cost, readily available and environmentally friendly surface that is liked by children. It is visually attractive, easy to maintain and importantly for children, can, by increasing the uninterrupted playing surface of a playground, enhance opportunities for incidental and unstructured play.

Grass can, on playgrounds with a low intensity of use, be successfully used below and around play equipment, removing the necessity to install specialist Impact Attenuating Surfaces. The suitability of grass has to be determined locally by risk assessment. The following criteria can form part of this assessment and will provide guidance as to whether grass is suitable for use.

- The maximum fall height of the equipment is less than 1,5 m.
- It should be assessed whether the grass has at least 150 mm of soil beneath it. (A reasonable evaluation may be made by pushing vertically by hand into the ground a thin probe, such as a screwdriver, to a depth of 150 mm, at regular and frequent locations, without it being impeded by a high proportion of solids, such as stone, brick or tree roots.)
- It should be ensured that the grass remains throughout the year and does not become mud or bare earth. Its impact absorbency is dependent upon the roots maintaining an uncompacted soil structure. This will need to be continually assessed following installation of equipment.

Following completion of a satisfactory risk assessment including the three principal criteria above, grass is suitable for use. However, operators may want to use other criteria they believe necessary to ensure the suitability of grass.

Grass, even in low usage playgrounds, will not sustain intensive use; for example: beneath the central arc of a swing; the run out area of a slide; below a fire fighters' pole; around the outside of a carousel; equipment access and exit points. For these relatively small high-wear areas, in order to meet the requirements of this standard, other surfaces to replace or prevent erosion of the grass are needed, taking care that no trip points or hard edges occur.

This British Standard was published under the authority of the Standards Policy and Strategy Committee on 31 July 2008

ISBN 978 0 580 64112 1

Amendments/corrigenda issued since publication

Date	Comments
30 September 2008	Correction to national foreword

Operators and providers are advised that equipment conforming to EN 1176 require regular maintenance. Guidance on this and appropriate inspection, maintenance and operation schedules are contained within BS EN 1176-7:2008.

National standards have been published by BSI on children's playground equipment since BS 3178 was first issued in 1959, this standard concentrated on specifications for specific types of equipment. It was replaced in 1979 by BS 5696 which switched focus to a design and safety approach.

With the increasing introduction of overseas equipment BSI led the way by calling for a European Standard to address the conflicting safety advice and standards from other countries. This was published in 1999 as BS EN 1176 and further focused on the safety of playground equipment.

All standards published by BSI are regularly assessed and this revision is part of the process, it takes into account new design concepts and the operating experience available to the standards committees.

It is advised that the previous version of BS EN 1176 will not be withdrawn until 31 May 2009 to give manufacturers time to amend their product lines.

Playground equipment not complying with this revision should not automatically be considered as being unsafe or to require replacement. A risk assessment by competent persons should be used to determine what action, if any, is necessary. Manufacturers and Inspectors of the Register of Play Inspectors International (RPII) are amongst those that will be able to assist in this.

A list of organizations represented on this committee can be obtained on request to its secretary.

This publication does not purport to include all the necessary provisions of a contract. Users are responsible for its correct application.

Compliance with a British Standard cannot confer immunity from legal obligations.

blank

EUROPEAN STANDARD

NORME EUROPÉENNE

EUROPÄISCHE NORM

EN 1176-1

May 2008

ICS 97.200.40

Supersedes EN 1176-1:1998

English Version

Playground equipment and surfacing - Part 1: General safety requirements and test methods

Equipements et sols d'aires de jeux - Partie 1 : Exigences de sécurité et méthodes d'essai générales

Spielplatzgeräte und Spielplatzböden - Teil 1: Allgemeine sicherheitstechnische Anforderungen und Prüfverfahren

This European Standard was approved by CEN on 25 April 2008.

CEN members are bound to comply with the CEN/CENELEC Internal Regulations which stipulate the conditions for giving this European Standard the status of a national standard without any alteration. Up-to-date lists and bibliographical references concerning such national standards may be obtained on application to the CEN Management Centre or to any CEN member.

This European Standard exists in three official versions (English, French, German). A version in any other language made by translation under the responsibility of a CEN member into its own language and notified to the CEN Management Centre has the same status as the official versions.

CEN members are the national standards bodies of Austria, Belgium, Bulgaria, Cyprus, Czech Republic, Denmark, Estonia, Finland, France, Germany, Greece, Hungary, Iceland, Ireland, Italy, Latvia, Lithuania, Luxembourg, Malta, Netherlands, Norway, Poland, Portugal, Romania, Slovakia, Slovenia, Spain, Sweden, Switzerland and United Kingdom.

EUROPEAN COMMITTEE FOR STANDARDIZATION
COMITÉ EUROPÉEN DE NORMALISATION
EUROPÄISCHES KOMITEE FÜR NORMUNG

Management Centre: rue de Stassart, 36 B-1050 Brussels

Ref. No. EN 1176-1:2008: E

Contents

Page

Foreword 4
Introduction 6
1 Scope 7
2 Normative references 7
3 Terms and definitions 8
4 Safety requirements 15
4.1 Materials 15
4.1.1 General 15
4.1.2 Flammability 15
4.1.3 Timber and associated products 15
4.1.4 Metals 16
4.1.5 Synthetics 16
4.1.6 Dangerous substances 16
4.2 Design and manufacture 16
4.2.1 General 16
4.2.2 Structural integrity 17
4.2.3 Accessibility for adults 18
4.2.4 Protection against falling 18
4.2.5 Finish of equipment 22
4.2.6 Moving parts 22
4.2.7 Protection against entrapment 22
4.2.8 Protection against injuries during movement and falling 27
4.2.9 Means of access 38
4.2.10 Connections 40
4.2.11 Consumable components 40
4.2.12 Ropes 40
4.2.13 Chains 42
4.2.14 Foundations 42
4.2.15 Heavy suspended beams 43
5 Test methods and reports 44
6 Information to be provided by the manufacturer/supplier 45
6.1 Information to be provided by the manufacturer/supplier of playground equipment 45
6.1.1 General product information 45
6.1.2 Pre-information 45
6.1.3 Installation information 45
6.1.4 Inspection and maintenance information 46
6.2 Information to be provided by the manufacturer or supplier of impact-attenuating surfacing 47
6.2.1 Pre-information 47
6.2.2 Installation 47
6.2.3 Inspection and maintenance 47
6.2.4 Identification of impact-attenuating playground surfacing 47
7 Marking 48
7.1 Equipment identification 48
7.2 Basic level mark 48
Annex A (normative) Loads 49
A.1 Permanent loads 49
A.2 Variable loads 49
A.3 Number of users on the equipment 54
Annex B (normative) Method of calculation of structural integrity 56
B.1 General principles: Limit state 56
B.2 Load combinations for static analysis 57

B.3 Worked example of the calculation of user loads (without safety factors) 58
B.4 Calculation of forces acting on a swing seat 61
B.5 Worked examples for forces acting on a swing (without safety factors) 63
B.6 Calculation of forces acting on the cable of a cableway 64
B.7 Worked example for forces acting on a cableway (without safety factors) 66

Annex C (normative) Physical testing of structural integrity 69
C.1 Pass/fail criteria 69
C.2 Test load for equipment 69
C.3 Load application 70
C.4 Test report 70

Annex D (normative) Test methods for entrapment 71
D.1 General 71
D.2 Head and neck entrapment 71
D.3 Entrapment of clothing (Toggle test) 77
D.4 Finger entrapment 80

Annex E (informative) Overview of possible entrapment situations 83

Annex F (informative) A–deviations 85
F.1 General 85
F.2 France 85
F.3 Germany 85

Bibliography 88

Foreword

This document (EN 1176-1:2008) has been prepared by Technical Committee CEN/TC 136 "Sports, playground and other recreational facilities and equipment", the secretariat of which is held by DIN.

This European Standard shall be given the status of a national standard, either by publication of an identical text or by endorsement, at the latest by November 2008, and conflicting national standards shall be withdrawn at the latest by May 2009.

Attention is drawn to the possibility that some of the elements of this document may be the subject of patent rights. CEN [and/or CENELEC] shall not be held responsible for identifying any or all such patent rights.

This document supersedes EN 1176-1:1998.

This European Standard consists of a number of parts as follows:

EN 1176-1, *Playground equipment and surfacing — Part 1: General safety requirements and test methods*

EN 1176-2, *Playground equipment and surfacing — Part 2: Additional specific safety requirements and test methods for swings*

EN 1176-3, *Playground equipment and surfacing — Part 3: Additional specific safety requirements and test methods for slides*

EN 1176-4, *Playground equipment and surfacing — Part 4: Additional specific safety requirements and test methods for cableways*

EN 1176-5, *Playground equipment and surfacing — Part 5: Additional specific safety requirements and test methods for carousels*

EN 1176-6, *Playground equipment and surfacing — Part 6 : Additional specific safety requirements and test methods for rocking equipment*

EN 1176-7, *Playground equipment and surfacing — Part 7: Guidance on installation, inspection, maintenance and operation*

EN 1176-10, *Playground equipment and surfacing — Part 10: Additional specific safety requirements and test methods for fully enclosed play equipment*

EN 1176-11, *Playground equipment and surfacing — Part 11: Additional specific safety requirements and test methods for spatial network*

This part of EN 1176 should be read in conjunction with:

EN 1177:2008, *Impact attenuating playground surfacing — Determination of critical fall height*.

For inflatable play equipment see:

EN 14960, *Inflatable play equipment — Safety requirements and test methods*.

The principal changes from the previous edition of this part of EN 1176 are as follows.

a) This part of EN 1176 now includes requirements for surfacing based on those that were previously specified in EN 1177.

b) The inclusion of additional requirements for barriers and steep play elements.

c) The requirements relating to entrapment are now for all age groups and the test for partially bound openings has been clarified, with new requirements included dependent on the angle of insertion.

According to the CEN/CENELEC Internal Regulations, the national standards organizations of the following countries are bound to implement this European Standard: Austria, Belgium, Bulgaria, Cyprus, Czech Republic, Denmark, Estonia, Finland, France, Germany, Greece, Hungary, Iceland, Ireland, Italy, Latvia, Lithuania, Luxembourg, Malta, Netherlands, Norway, Poland, Portugal, Romania, Slovakia, Slovenia, Spain, Sweden, Switzerland and the United Kingdom.

Introduction

It is not the purpose of the requirements of this standard to lessen the contribution that playground equipment makes to the child's development and/or play, which is meaningful from an educational point of view.

This standard acknowledges the difficulties of addressing safety issues by age criteria alone because the ability to handle risk is based on the individual users' level of skills and not by age. Also users other than the intended age range will almost certainly make use of the playground equipment.

Risk-taking is an essential feature of play provision and of all environments in which children legitimately spend time playing. Play provision aims to offer children the chance to encounter acceptable risks as part of a stimulating, challenging and controlled learning environment. Play provision should aim at managing the balance between the need to offer risk and the need to keep children safe from serious harm.

The principles of safety management are applicable both to workplaces in general as well as to play provision. However, the balance between safety and benefits is likely to be different in the two environments. In play provision exposure to some degree of risk may be of benefit because it satisfies a basic human need and gives children the chance to learn about risk and consequences in a controlled environment.

Respecting the characteristics of children's play and the way children benefit from playing on the playground with regard to development, children need to learn to cope with risk and this may lead to bumps and bruises and even occasionally a broken limb. The aim of this standard is first and foremost to prevent accidents with a disabling or fatal consequence, and secondly to lessen serious consequences caused by the occasional mishap that inevitably will occur in children's pursuit of expanding their level of competence, be it socially, intellectually or physically.

Refusal of admittance and access as a safety precaution is problematic due to, for example, breach in supervision or help by peers. Requirements of significant importance, such as, for example, head and neck entrapment and protection against inadvertent falls, have been written with this in mind. It is also recognised that there is an increasing need for play provision to be accessible to users with disabilities. This of course requires play areas to provide a balance between safety and the offer of the required level of challenge and stimulation to all possible groups of users. However, for the purposes of protection against head and neck entrapment, this standard does not take into account children with an increased size of the head (e.g. hydrocephalus or Downs Syndrome) or wearing helmets.

1 Scope

This part of EN 1176 specifies general safety requirements for public playground equipment and surfacing. Additional safety requirements for specific pieces of playground equipment are specified in subsequent parts of this standard.

This part of EN 1176 covers playground equipment for all children. It has been prepared with full recognition of the need for supervision of young children and of less able or less competent children.

The purpose of this part of EN 1176 is to ensure a proper level of safety when playing in, on or around playground equipment, and at the same time to promote activities and features known to benefit children because they provide valuable experiences that will enable them to cope with situations outside the playground.

This part of EN 1176 is applicable to playground equipment intended for individual and collective use by children, but excluding adventure playgrounds. It is also applicable to equipment and units installed as children's playground equipment although they are not manufactured as such, but excludes those items defined as toys in EN 71 and the Toys Safety Directive.

NOTE Adventure playgrounds are fenced, secured playgrounds, run and staffed in accordance with the widely accepted principles that encourage children's development and often use self-built equipment.

This part of EN 1176 specifies the requirements that will protect the child from hazards that he or she may be unable to foresee when using the equipment as intended, or in a manner that can be reasonably anticipated.

2 Normative references

The following referenced documents are indispensable for the application of this document. For dated references, only the edition cited applies. For undated references, the latest edition of the referenced document (including any amendments) applies.

EN 335-2:2006, *Durability of wood and wood-based products — Definition of use classes — Part 2: Application to solid wood*

EN 350-2:1994, *Durability of wood and wood-based products — Natural durability of solid wood — Part 2: Guide to natural durability and treatability of selected wood species of importance in Europe*

EN 351-1:2007, *Durability of wood and wood-based products — Preservative-treated solid wood — Part 1: Classification of preservative penetration and retention*

EN 636, *Plywood — Specifications*

EN 1177, *Impact attenuating playground surfacing — Determination of critical fall height*

EN 1991-1-2, *Eurocode 1: Actions on structures — Part 1-2: General actions – Actions on structures exposed to fire*

EN 1991-1-3, *Eurocode 1: Actions on structures — Part 1-3: General actions – Snow loads*

EN 1991-1-4, *Eurocode 1: Actions on structures – Part 1-4: General actions – Wind actions*

EN 13411-3, *Terminations for steel wire ropes – Safety – Part 3: Ferrules and ferrule-securing*

EN 13411-5, *Terminations for steel wire ropes – Safety – Part 5: U-bolt wire rope grips*

EN ISO 2307, *Fibre ropes – Determination of certain physical and mechanical properties (ISO 2307:2005)*

EN ISO 9554, *Fibre ropes – General specifications (ISO 9554:2005)*

EN ISO/IEC 17025, *General requirements for the competence of testing and calibration laboratories (ISO/IEC 17025:2005)*

ISO 1834, *Short link chain for lifting purposes – General conditions of acceptance*

3 Terms and definitions

For the purposes of this European standard, the following terms and definitions apply.

3.1
playground equipment
equipment and structures, including components and constructional elements with, or on which, children can play outdoors or indoors, either individually or in groups, according to their own rules or own reasons for playing which can change at any time

3.2
climbing equipment
playground equipment that only allows the user to move on it or in it by the use of a hand and foot/leg support and requires a minimum of three points of contact with the equipment, one of these being a hand

NOTE During movement it is possible to have only one or two points of contact but this is only during a transition from one rest position to the next.

3.3
impact area
area that can be hit by a user after falling through the falling space

3.4
playing surface
surface of a playground from which the use of the playground equipment commences and which comprises at least the impact area

3.5
free space
space in, on or around the equipment that can be occupied by a user undergoing a movement forced by the equipment (e.g. sliding, swinging, rocking)

3.6
free height of fall
greatest vertical distance from the clearly intended body support to the impact area below

NOTE The intended body support includes those surfaces to which access is encouraged.

3.7
falling space
space in, on or around the equipment that can be passed through by a user falling from an elevated part of the equipment (see Figure 1)

NOTE The falling space commences at the free height of fall.

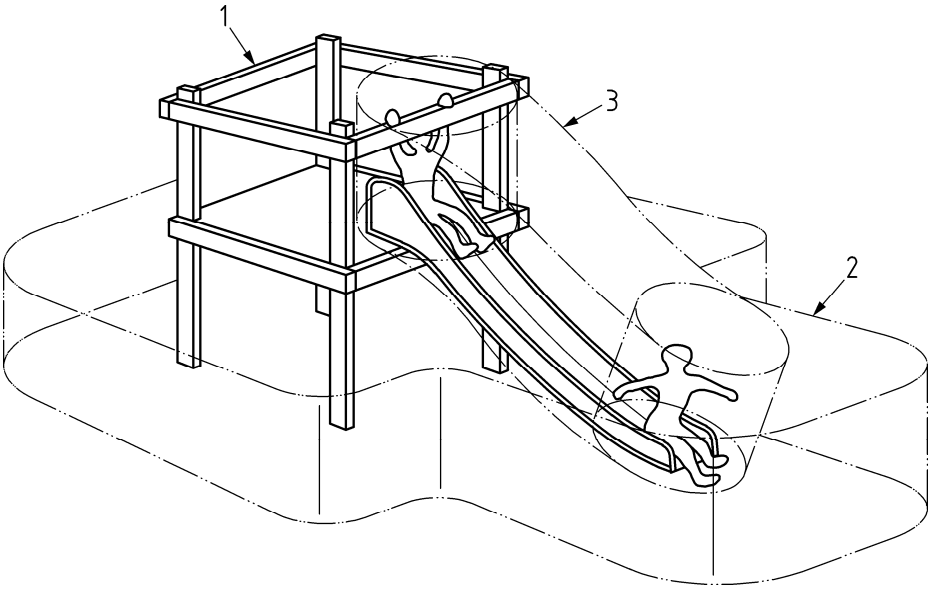

Key

1 space occupied by equipment

2 falling space

3 free space

Figure 1 — Spaces

3.8
minimum space
space required for the safe use of equipment, comprising falling space, free space and space occupied by the equipment

3.9
collective use
use by more than one user at the same time

3.10
crushing point
place where parts of the equipment can move against each other, or against a fixed area so that persons, or parts of their body, can be crushed

3.11
shearing point
place where part of the equipment can move past a fixed or other moving part, or past a fixed area so that persons, or parts of their body, can be cut

3.12
ladder
means of access incorporating rungs or steps on which a user can ascend or descend with the aid of the hands (see Figure 2)

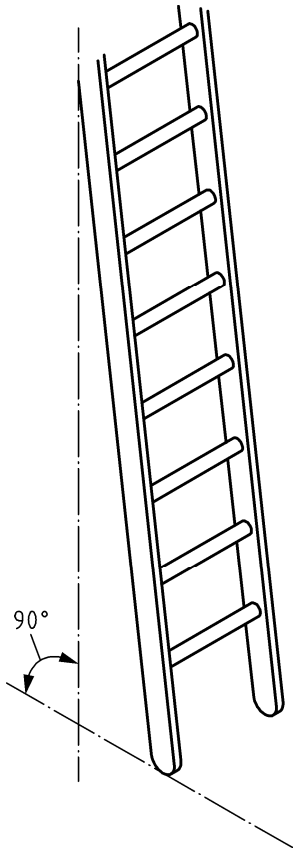

Figure 2 — Example of a ladder

3.13
stairs
means of access incorporating treads on which a user can ascend or descend (see Figure 3)

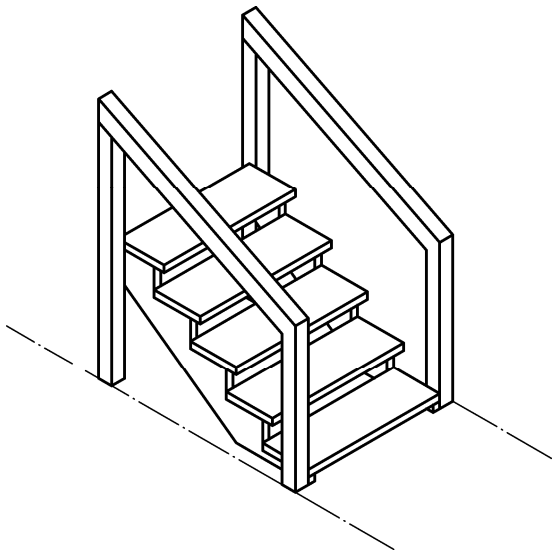

Figure 3 — Example of stairs

3.14
ramp
means of access incorporating an inclined surface on which a user can ascend or descend (see Figure 4 and 4.2.9.3 first sentence)

NOTE For maximum inclination see 4.2.9.3.

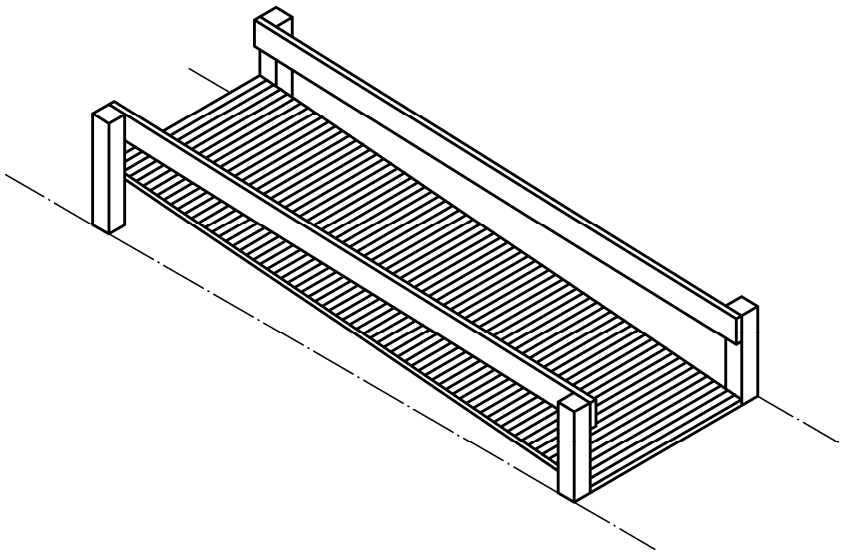

Figure 4 — Example of a ramp

3.15
grip
holding of the hand round the entire circumference of a support (see Figure 5)

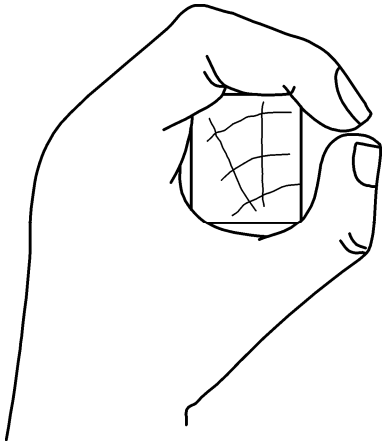

Figure 5 — Grip

3.16
grasp
holding of the hand round part of the circumference of a support (see Figure 6)

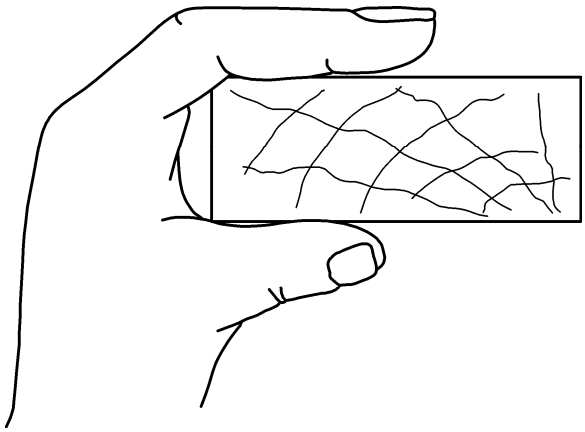

Figure 6 — Grasp

3.17
entrapment
hazard presented by the situation in which a body, or part of a body, or clothing can become trapped

NOTE This part of EN 1176 only considers certain types of entrapment where the user is not able to free him/herself and injury is caused by the entrapment.

3.18
obstacle
object or portion of an object that protrudes inside the space occupied by equipment, the falling space or the free space of a user

NOTE The risks associated with obstacles in playground equipment will vary according to its situation in, on or around the equipment e.g.

— in the free space, something in the path of a user undergoing a forced movement,

— in the falling space, something hard and sharp that a user can hit during a fall from an elevated position,

— for other types of movement, something unexpected with which a user might collide whilst moving in, on or around the equipment.

3.19
cluster
two or more separate pieces of equipment designed to be installed in close proximity to each other to provide continuity in a sequence that is needed for the play activity, e.g. trail of stepping stones

3.20
platform
raised surface where one or more users can stand without the need of hand support

NOTE The classification of a platform will vary depending on the function of the playground equipment. Surfaces where the user is only able to stand with the aid of hand supports are not classified as platforms. This may be achieved by a number of means, e.g.

— reducing the surface area to restrict free movement and encourage holding on;

— incline the surface to encourage holding on;

— introducing movement to the surface to encourage holding on.

3.21
handrail
rail intended to assist the user to balance

3.22
guardrail
rail intended to prevent a user from falling

3.23
barrier
device intended to prevent the user from falling and from passing beneath

3.24
easily accessible
requiring only basic skills to access the equipment, allowing users to move freely and quickly onto/within the equipment

3.25
routine visual inspection
inspection intended to identify obvious hazards that can result from normal use, vandalism or weather conditions

NOTE Typical hazards can take the form of broken parts or broken bottles.

3.26
operational inspection
inspection, more detailed than routine visual inspection, to check the operation and stability of the equipment

NOTE Typical checks include an examination for wear.

3.27
annual main inspection
inspection intended to establish the overall level of safety of equipment, foundations and playing surfaces

NOTE Typical checks include the effects of weather, evidence of rotting or corrosion and any change in the level of safety of the equipment as a result of repairs made, or of added or replaced components.

3.28
steep play element
access/egress play element of a gradient greater than 45 degrees from the horizontal

3.29
tiered platforms
successive platforms of varying heights allowing the user to ascend or descend on or within the equipment

NOTE Stairs are not considered to be tiered platforms.

3.30
critical fall height
maximum free height of fall for which a surface will provide an acceptable level of impact attenuation

NOTE The critical fall height is determined according to the lowest test result obtained in accordance with EN 1177.

3.31
surface flash
rapid spread of flame over the surface of a material without combustion of the basic structure at that time

4 Safety requirements

4.1 Materials

4.1.1 General

Materials shall conform to 4.1.2 to 4.1.5.

Materials shall be selected and protected such that the structural integrity of the equipment manufactured from them is not affected before the next relevant maintenance inspection.

NOTE 1 EN 1176-7 gives recommendations on maintenance inspections.

Materials should be manufactured in a workmanlike manner.

NOTE 2 The provisions relating to certain materials in this standard do not imply that other equivalent materials are unsuitable in the manufacture of children's playground equipment.

The selection of materials and their use should be in accordance with appropriate European Standards.

Special attention should be given to surface coatings to avoid potential toxic hazards.

The choice of materials should be appropriate where extreme climatic or atmospheric conditions are to be expected.

Where very low or very high temperatures can be anticipated care should be taken on material selection to avoid possible hazards through direct skin contact.

In the choice of a material or substance for playground equipment, consideration should be given to the eventual disposal of the material or substance having regard to any possible environmental toxic hazard.

4.1.2 Flammability

To avoid the risk of fire and associated hazards, materials known to produce surface flash shall not be used. Particular attention should be given to newly developed products whose properties might not be fully known.

NOTE 1 Requirements for adequate exits to ensure escape in cases of fire are given in 4.2.3.

NOTE 2 Attention is drawn to national and local building regulations regarding flammability for equipment installed both indoors and outdoors.

4.1.3 Timber and associated products

Timber parts shall be designed in such a way that precipitation can drain off freely and water accumulation shall be avoided.

In cases of ground contact, one or more of the following methods shall be used:

a) use of timber species with sufficient natural resistance in accordance with classes 1 and 2 of the natural resistance classification given in EN 350-2:1994, 4.2.2;

b) construction methods, e.g. post shoe;

c) use of timber treated with wood preservatives in accordance with EN 351-1:2007, Figure A.1 and in accordance with EN 335-2:2006, use class 4.

Consideration should also be given to other factors which can be unsuitable, such as splintering, poisoning etc.

All components made of timber and associated products, other than those species conforming to a), that affect the stability of the structure and are in constant contact with the ground shall be treated in accordance with c).

When selecting metal fastenings, consideration should be given to the species of timber and chemical treatments used as some will accelerate corrosion of metals if there is contact between them.

Plywood shall be in accordance with EN 636 and shall be weatherproofed.

4.1.4 Metals

Metal parts should be protected against atmospheric conditions and cathodic corrosion.

Metals that produce toxic oxides that scale or flake shall be protected by a non-toxic coating.

4.1.5 Synthetics

If, during maintenance, it is difficult to determine at what point material becomes brittle, manufacturers shall give an indication of the time period after which the part or equipment should be replaced.

It should be possible for the operator of the playground to visually identify excessive wear of the gelcoat of GRP (glass-reinforced plastics) products intended for sliding before the user becomes exposed to the glass fibres.

NOTE This can be achieved for example by the use of different coloured layers in the sliding surface.

Consideration should also be given to degradation of structural components through ultraviolet influences.

4.1.6 Dangerous substances

Dangerous substances shall not be used in playground equipment in such a way that they can cause adverse health effects to the user of the equipment.

NOTE Attention is drawn to the provisions of the Dangerous Substances Directive 76/769/EEC and its successive modifications. Prohibited materials include but are not limited to, asbestos, lead, formaldehyde, coal tar oils, carbolineums and polychlorinated biphenyls (PCBs).

4.2 Design and manufacture

4.2.1 General

Equipment where the primary play function is augmented by a secondary motion, e.g. rocking and/or rotating, shall conform to the additional parts of EN 1176 relating to both play functions, as appropriate, unless the equipment is specifically covered in just one of the additional parts of EN 1176.

The dimensions and degree of difficulty of the equipment should be suitable for the intended user group. The equipment should be designed so that the risk involved in play is apparent and foreseeable by the child.

NOTE For additional safety of equipment that is easily accessible, specific requirements have been included for the following:

— protection against falling:

  — guardrails (4.2.4.3);

  — barriers (4.2.4.4);

— steep elements (4.2.9.4);

— easily accessible playground equipment (4.2.9.5).

Except when intended for water play, all parts of playground equipment should be designed so that they do not accumulate water.

4.2.2 Structural integrity

For playground equipment, the structural integrity for the worst case of the intended combinations shall be proved.

Structural integrity, including stability of the equipment shall be assessed by one of the following:

a) calculation, in accordance with Annexes A and B;

b) physical testing, in accordance with Annex C; or

c) combination of a) and b).

When calculations are carried out in accordance with Annex B no limit states shall be exceeded at combinations of loads as given in B.2.

When tested in accordance with Annex C, the equipment shall not show any cracks, damage or excessive permanent deformation (see C.1.2).

For some equipment, these specific calculations or tests are not always appropriate, but the structural integrity shall be at least equivalent

Each structure shall resist both the permanent and variable loads acting on equipment and parts of equipment as described in Annex C.

When playground equipment relies on one post for its stability, the construction should be carried out in order to:

— minimize rotting or corrosion in parts relevant for stability;

— allow for controlling degradation and the need for decommission;

— be used without collapse within the foreseen inspection period when maintained correctly.

NOTE 1 No allowance for accidental loads, i.e. loads produced by fire, collision by vehicles or earthquake, need be made for playground equipment.

NOTE 2 The loads associated with fatigue are in general much smaller than the loads in combination with the appropriate load factors when calculated in accordance with B.2. Therefore playground equipment in general need not be verified for fatigue.

Structural parts shall resist the worst case loading condition.

NOTE 3 To achieve this, it may be necessary to remove that part of the user load causing favourable effects, as shown in Figure 7.

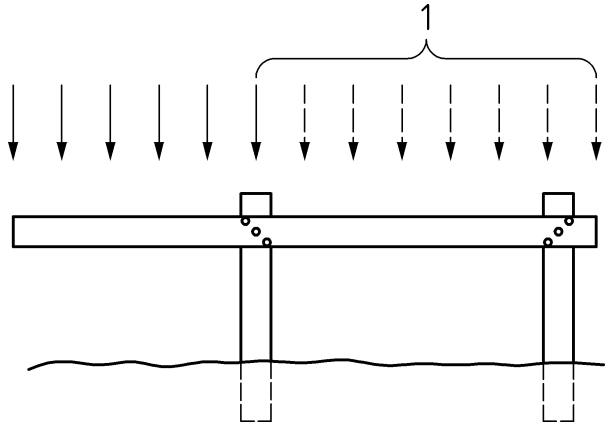

Key
1 remove this part of the load because of favourable effects

Figure 7 — Example of removal of that part of the user load which causes a favourable effect

4.2.3 Accessibility for adults

Playground equipment shall be designed to ensure that adults are able to gain access to assist children within the equipment.

Enclosed parts of the equipment such as tunnels and playhouses, with an internal distance greater than 2 000 mm from an entry point shall have at least two access openings that are independent of one another and situated on different sides of the equipment. These openings shall not be capable of being locked and shall be accessible without any additional aids (e.g. a ladder that is not an integral part of the equipment). These access openings shall have no dimension less than 500 mm.

Because of the risk of fire, these two openings shall allow the user to leave the equipment by different routes.

4.2.4 Protection against falling

4.2.4.1 Types of protection

Figure 8 shows the appropriate type of protection with different heights of equipment.

When installed on ramps or stairs, handrails, guardrails or barriers shall commence at the lowest position on the ramp or stairs.

Dimensions in millimetres

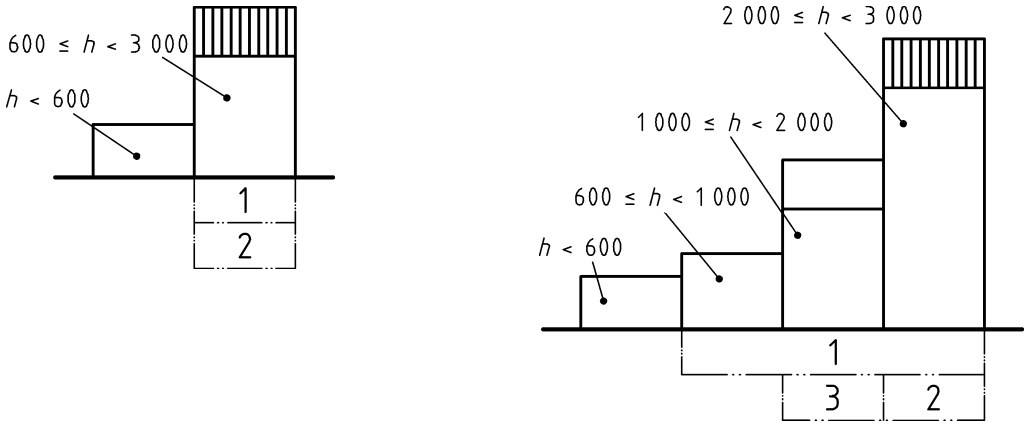

a) Equipment easily accessible to all ages

b) Equipment not easily accessible

Key

1 surfacing in accordance with 4.2.8.5
2 barriers required
3 guardrail required

Figure 8 — Protection against falling

4.2.4.2 Handrails

Handrails shall be not less than 600 mm and not more than 850 mm above the foot position (see Figure 9). As a minimum, handrails shall conform to the requirements for grasp see 4.2.4.7.

Dimensions in millimetres

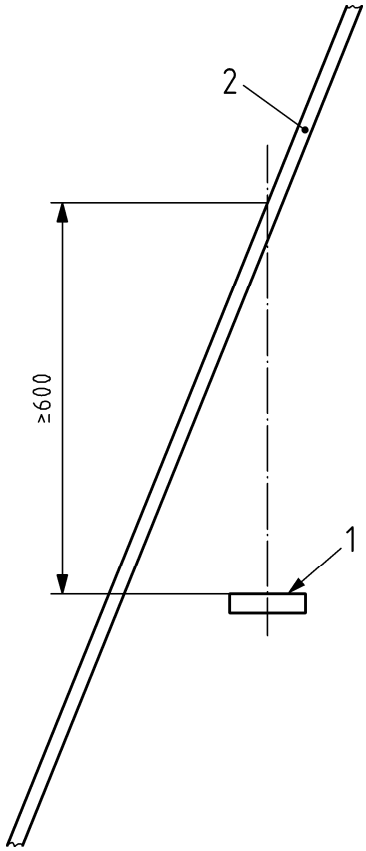

Key
1 foot position
2 handrail

Figure 9 — Guidance on measurement of height of handrail above foot position

4.2.4.3 Guardrails

For equipment other than that which is easily accessible, guardrails shall be provided when the platform is 1 000 mm to 2 000 mm above the playing surface. The height to the top of the guardrail shall be not less than 600 mm and not more than 850 mm measured from the surface of the platform, stairs or ramp.

Guardrails shall completely surround the platform except for entrance and exit openings necessary for each play element. The width of entrance and exit openings in guardrails, with the exception of stairs, ramps and bridges, shall have a maximum clear opening of 500 mm. For stairs, ramps and bridges the width of the exit opening in the guardrail shall be no greater than the width of these elements.

4.2.4.4 Barriers

Except for entrance and exit openings necessary for each play element, barriers shall completely surround the platform. The width of entrance and exit openings in barriers shall have a clear opening of 500 mm maximum, unless a guardrail is provided across the opening (see Figure 10 b and c). For stairs, ramps, bridges, etc., that have additional barriers as part of their structure, the width of the exit opening in the barrier shall be no greater than the width of these elements.

There shall be no intermediate horizontal or near horizontal rails or bars that can be used as steps by children attempting to climb. The design of the top of the barriers should not encourage children to stand or sit on them, nor should any infilling encourage climbing.

Openings between the platform surface and the lower edge of the barrier and between any infilling elements shall not allow passage of the small probe C.

For easily accessible equipment barriers shall be provided when the platform is more than 600 mm above the playing surface.

For equipment other than easily accessible, barriers shall be provided when the platform is more than 2 000 mm above the playing surface.

The height to the top of the barrier shall be at least 700 mm measured from the surface of the platform, stairs or ramp.

Openings in the barrier of easily accessible equipment/parts of equipment that give access to steep play elements shall conform to the requirements of 4.2.9.4. For all other equipment, openings in the barrier provided with a guardrail, which give access to steep play elements, shall not be greater than 1 200 mm (see Figure 10 c).

Dimensions in millimetres

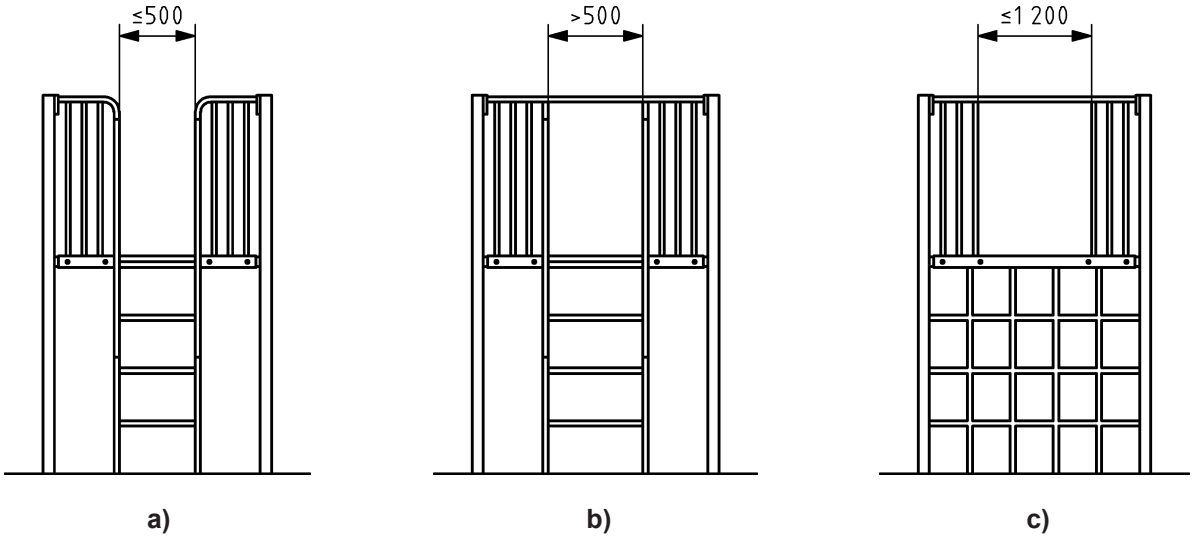

Figure 10 — Entrance and exit openings in barriers

4.2.4.5 Strength requirements

Barriers and guardrails shall conform to 4.2.2.

4.2.4.6 Grip requirements

The cross section of any support designed to be gripped (see Figure 5) shall have a dimension of not less than 16 mm or more than 45 mm in any direction, when measured across its centre.

4.2.4.7 Grasp requirements

The cross section of any support designed to be grasped (see Figure 6) shall have a width not exceeding 60 mm.

4.2.5 Finish of equipment

Wooden equipment shall be made of wood with a low susceptibility to splintering. The surface finish of equipment made of other materials (e.g. glass fibre) shall be non-splintering.

There shall be no protruding nails, projecting wire rope terminations or pointed or sharp-edged components. Rough surfaces should not present any risk of injury. Protruding bolt threads within any accessible part of the equipment shall be permanently covered, e.g. dome headed nuts. Nuts and bolt heads that project less than 8 mm shall be free from burrs. All welds shall be ground smooth.

NOTE 1 Figure 11 shows examples of protection for nuts and bolts.

Corners, edges and projecting parts within the space occupied by the user that protrude more than 8 mm, and which are not shielded by adjacent areas that are not more than 25 mm from the end of the projecting part, shall be rounded off. The minimum radius of the curve shall be 3 mm.

NOTE 2 This requirement is intended only to prevent injuries caused by unintended contact with components.

Corners, edges and projections with a radius less than 3 mm may be in other accessible parts of the equipment only if they are not sharp.

Dimensions in millimetres

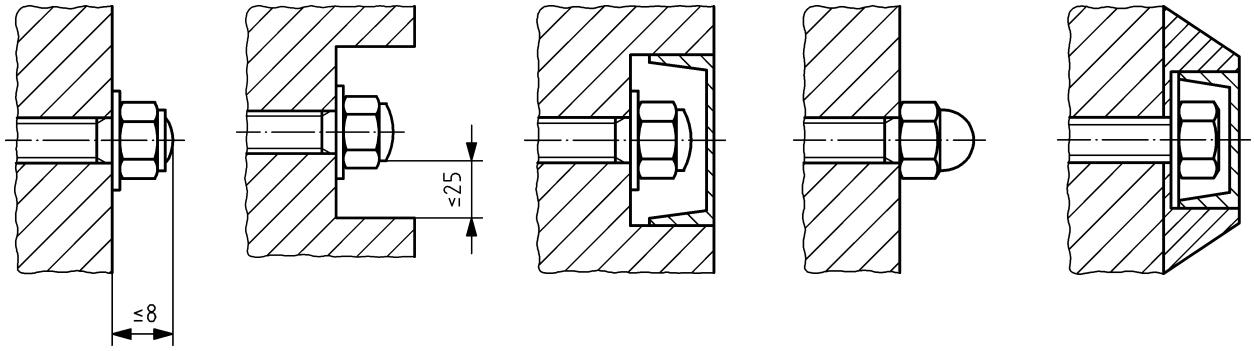

Figure 11 — Examples of protection for nuts and bolts

4.2.6 Moving parts

There shall be no crushing points or shearing points between moving and/or stationary parts of the equipment, in accordance with 4.2.7.

Parts from which a high impact force can emanate should have an attenuating construction.

If moving parts of the equipment can endanger the body, there shall be a ground clearance of at least 400 mm to the ground.

4.2.7 Protection against entrapment

4.2.7.1 General

When choosing materials, the manufacturer should take into account the entrapment hazards that can occur through distortion of materials during use.

NOTE 1 Test methods for entrapment are given in Annex D.

NOTE 2 Possible entrapment situations are illustrated in Annex E.

Openings shall have no parts that converge in the downward direction at an angle of less than 60°.

4.2.7.2 Entrapment of the head and neck

Equipment shall be constructed so that any openings do not create head and neck entrapment hazards either by head first or feet first passage.

Hazardous situations in which this type of entrapment can be encountered include the following:

— completely bound openings through which a user may slide feet first or head first;

— partially bound or V-shaped openings;

— other openings (e.g. shearing or moving openings).

a) Completely bound openings:

Accessible completely bound openings with a lower edge more than 600 mm above ground shall be tested in accordance with D.2.1.

Probes C or E shall not pass through any opening unless it also allows the passage of the large head probe D.

b) Partially bound and V-shaped openings:

Partially bound and V-shaped openings with an entrance at 600 mm or more above the ground shall be constructed so that either:

1) opening is not accessible when tested in accordance with D.2.2; or

2) if accessible at a position of 600 mm or more above ground when tested in accordance with D.2.2, depending on the angular orientation range of the opening (see Figure D.4), shall conform to the following:

   — Range 1: (template centre line ± 45° from vertical); when the template apex contacts the base of the opening, the depth of the opening shall be less than the length of the template to the underside of the shoulder section.

   — Range 2: (template centre line from horizontal to + 45°); when the template apex contacts the base of the opening, the depth of the opening shall be less than the ‘A’ portion of the template. If the depth of the opening is greater than the ‘A’ portion of the template all parts of the opening above the ‘A’ portion shall also allow insertion of the shoulder section of the template or probe D.

   — Range 3: No template test requirements.

c) Other openings (e.g. shearing or moving openings):

Non-rigid members (for example ropes) shall not overlap if, by doing so, they create openings that do not conform to the requirements for completely bound openings.

Openings between the flexible parts of suspended bridges and any rigid side members shall be not less than 230 mm in diameter under the worst case condition of loading (see 4.2.2). Both loaded and unloaded situations shall be considered.

NOTE This requirement relates to the potential change in dimensions as a result of the stretching of bridge flexible supports (e.g. wire) over time. A typical suspended bridge is illustrated in Figure 12.

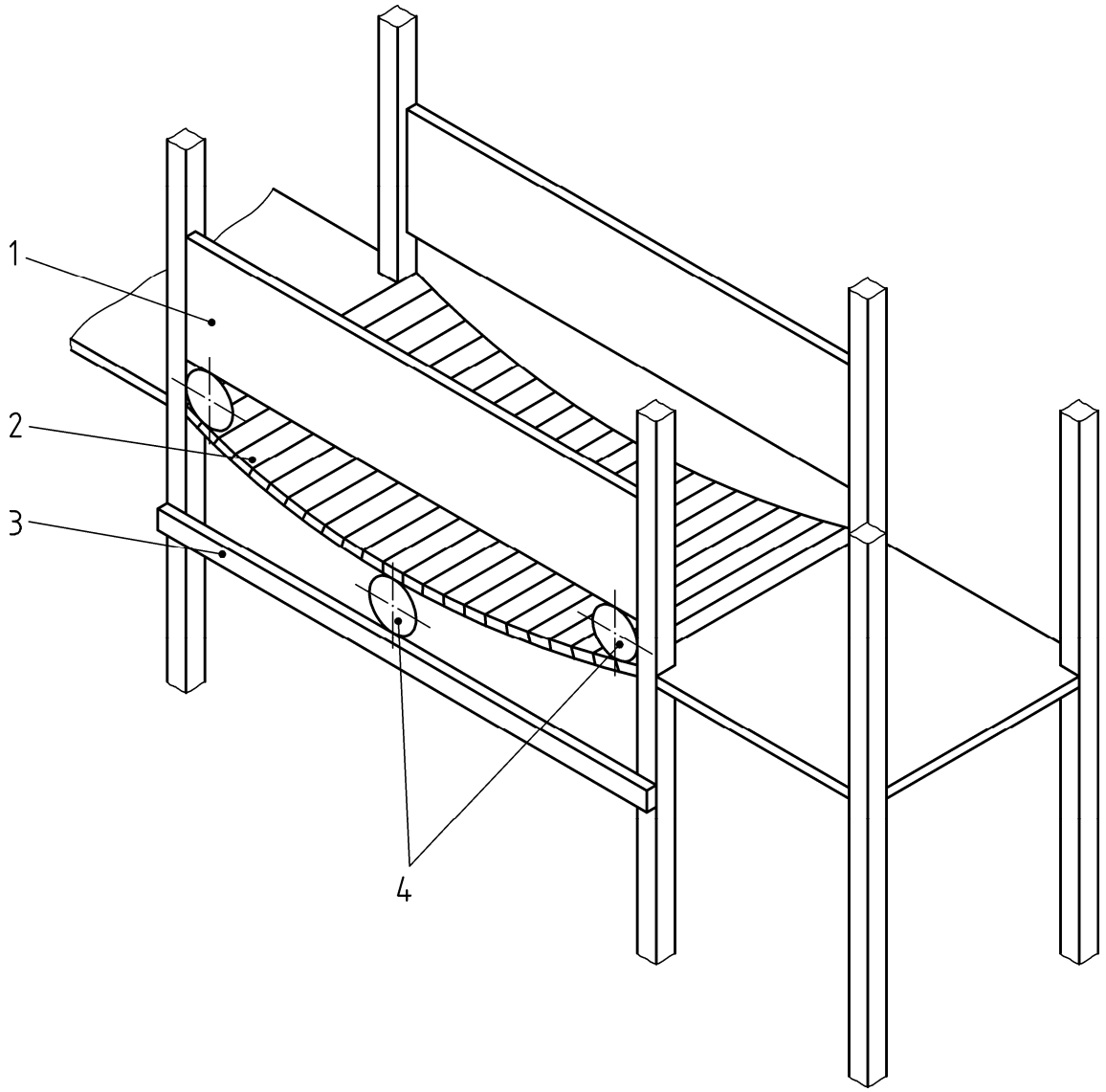

Key

1 rigid side members
2 suspended bridge
3 rigid side members
4 diameter 230 mm minimum

Figure 12 — Suspended bridge

4.2.7.3 Entrapment of clothing/hair

Equipment should be constructed so that hazardous situations including:

a) gaps or V-shaped openings in which a part of clothing can become trapped while or immediately before the user is undergoing a forced movement;

b) protrusions; and

c) spindles/rotating parts

in which clothing entrapment can be encountered are not created.

NOTE 1 The toggle test (see D.3) is restricted to the free space as practical experience has shown that natural materials and connections between different parts can vary over time. The definition of free space (see 3.5) does not include the three-dimensional area in which the falling movement takes place.

Special consideration should be given when using elements of circular cross-section, e.g. round tubes or poles, to avoid clothing entanglement within the falling space.

NOTE 2 This can be achieved by use of spacers or similar devices.

Slides and fireman's poles shall be constructed so that openings located within the free space do not trap the toggle when tested in accordance with D.3.

Roofs shall be constructed so that they do not trap the toggle when tested in accordance with D.3.

Spindles and rotating parts shall be constructed so as to prevent entanglement of clothing or hair.

NOTE 3 This can be achieved by use of suitable covering or shields.

4.2.7.4 Entrapment of the whole body

Equipment should be constructed so that the following hazardous situations, which might cause entrapment, are not created:

a) tunnels into which children can crawl with their whole body; and

b) suspended parts which are heavy or have rigid suspension.

Tunnels shall conform to the requirements given in Table 1.

Table 1 — Requirements for tunnels

Linear dimensions in millimetres

	Open one end	Open both ends			
Inclination	≤ 5° and upwards only when entering	≤ 15°			> 15°
Minimum internal dimension [a]	≥ 750	≥ 400	≥ 500	≥ 750	≥ 750
Length	≤ 2 000	≤ 1 000	≤ 2 000	None	None
Other requirements	None	None	None	None	Provision for climbing e.g. steps or handles
NOTE For tunnel slides, see EN 1176-3.					
[a] Measured at the narrowest point.					

4.2.7.5 Entrapment of the foot or leg

Equipment should be constructed so that the following hazardous situations, which might cause entrapment, are not created:

a) completely bound rigid openings in surfaces on which children can run or climb; and

b) footholds, handholds, etc. extending from these surfaces.

NOTE In the case of b) the entrapped foot or ankle can be severely injured if the user falls.

Dimensions in millimetres

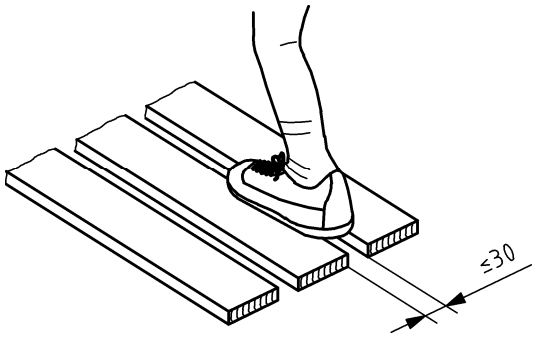

Figure 13 — Measurement of gaps limited to 30 mm

Surfaces intended for running/walking shall not contain gaps likely to cause foot or leg entrapment. Gaps in the main direction of travel shall not be greater than 30 mm when measured across the direction of travel, (see Figure 13).

This requirement does not apply to surfaces inclined more than 45°.

4.2.7.6 Entrapment of fingers

Equipment should be constructed so that the following hazardous situations, which might cause entrapment, are not created:

a) gaps in which fingers can be trapped whilst the remainder of the body is moving or continues in forced movement, for example sliding, swinging; and

b) variable gaps (excluding chains).

Openings within the free space, where the user is subjected to forced movement, and/or holes which have a lower edge more than 1 000 mm above the potential impact area, when tested in accordance with D.4, shall conform to one of the following requirements:

c) 8 mm finger rod (see Figure D.10 a)) shall not pass through the minimum cross-section of the opening and the profile of the opening shall be such that the rod cannot be locked in any position when set in motion as given in D.4.2; or

d) if the 8 mm finger rod passes through the opening, the 25 mm finger rod (see Figure D.10 b)) shall also pass through the opening, provided that the opening does not permit access to another finger entrapment site.

The ends of tubes and pipes shall be closed off to prevent the risk of finger entrapment.

The closures shall not be removable without using tools.

Gaps whose dimensions change during use of the equipment shall have a minimum dimension in any position of 12 mm.

4.2.8 Protection against injuries during movement and falling

4.2.8.1 Determination of free height of fall

Unless stated otherwise, the free height of fall shall be as given in Table 2. In determining the free height of fall, the possible movements of the equipment and of the user shall be taken into account. In general, this means that the maximum movement of the equipment shall be taken.

In the case of roofs, or other features not intended for play, it is not required for them to be included in the free height of fall where access has not been encouraged.

NOTE Some examples of features that could encourage access are:

— play feature, which can be accessed from the roof,

— hand and foot holds for climbing,

— arm or leg reach distance,

— inclination of the roof,

— roughness of the roof surface.

The free height of fall (h) shall not exceed 3 m (see Figure 14).

Table 2 — Free height of fall for different types of use

Type of use	Vertical distance
Standing	from foot support to surface below
Sitting	from seat to surface below
Hanging (When full body support is provided by the hands only and the whole body can be lifted up to the hand support, see Figure 14b)	From hand support height to surface below
Climbing * (When body support is a combination of feet/legs and hands, e.g. climbing ropes or sliding poles)	maximum foot support: 3 m to the surface below maximum hand support: 4 m to the surface below (Free height of fall measured from maximum hand support minus 1 m to the surface below)
* Such equipment constructed for use as 'Climbing' shall not allow access to positions with a free height of fall of more than 3 m.	

Dimensions in millimetres

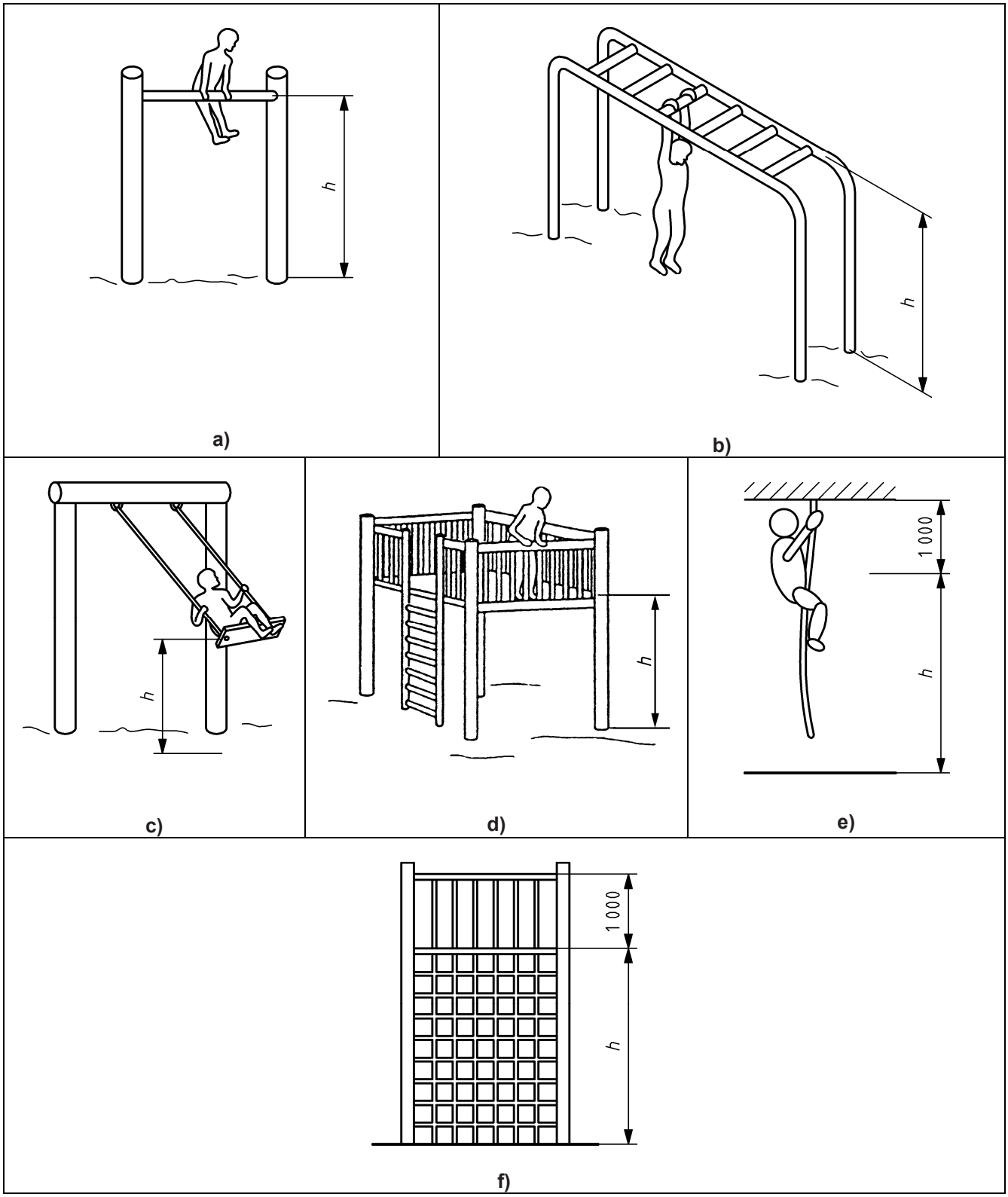

Key
h free height of fall

Figure 14 — Examples showing free height of fall

4.2.8.2 Determination of spaces and areas

4.2.8.2.1 General

The requirements for falling space and impact area within this standard are intended to offer some protection to users during the first impact of a potential fall. These spaces and areas will also afford some protection to other users who may be circulating around the equipment items, but these requirements should be considered in addition to this standard as they are likely to be site specific and may be subject to national control. In particular the attention of the play area designer is directed to possible hazards associated with the close proximity of play structures intended for users of greatly different age groups and those in highly populated play areas such as those found in some schools.

Care should be taken when seated dynamic equipment with significant motion, e.g. swings and certain types of rocking equipment, to discourage users of the surrounding play area from unintentionally coming into contact with the equipment. This can be achieved, for example, by placing the equipment at the perimeter of the play area.

4.2.8.2.2 Minimum space

The minimum space shall consist of the following:

a) space occupied by the equipment;

b) free space, if any; and

c) falling space.

4.2.8.2.3 Free space

The free space is a series of cylindrical spaces representing the user (see Figure 15), originating from and perpendicular to the bearing surface, along the forced path of the user.

The cylindrical space is shown in Figure 16 and its dimensions are given in Table 3. In determining the free space, the possible movements of the equipment and the user shall be taken into account.

Fireman's poles that are accessed via a platform or other starting point shall have a clearance of at least 350 mm from the pole to the edge of the adjacent structure.

NOTE 1 This is to allow safe grabbing of the pole while reducing the risk of head impact on the adjacent structure.

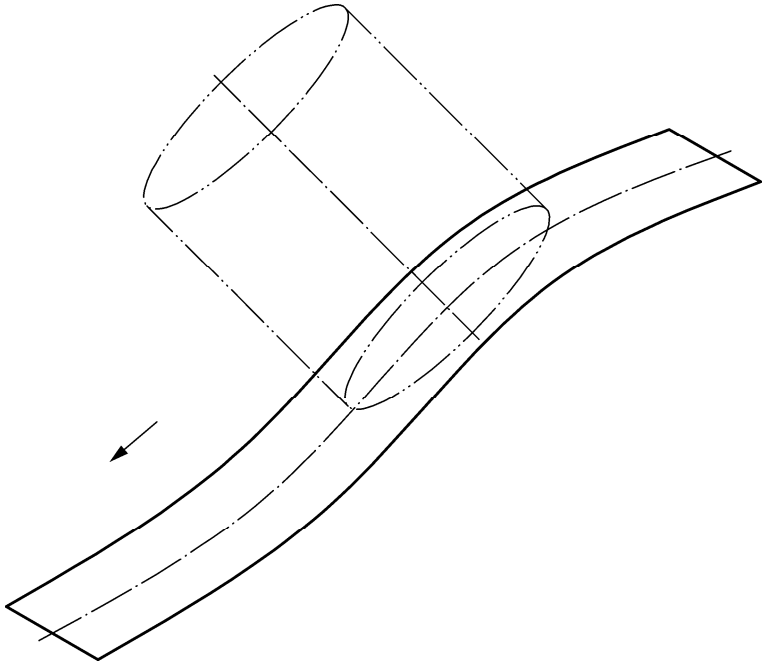

Figure 15 — Determination of the free space; example of a slide

Dimensions in millimetres

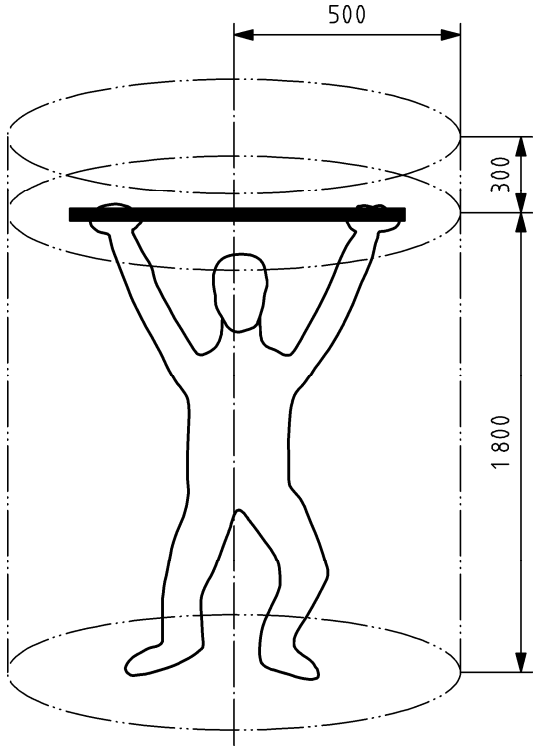

a) Hanging user

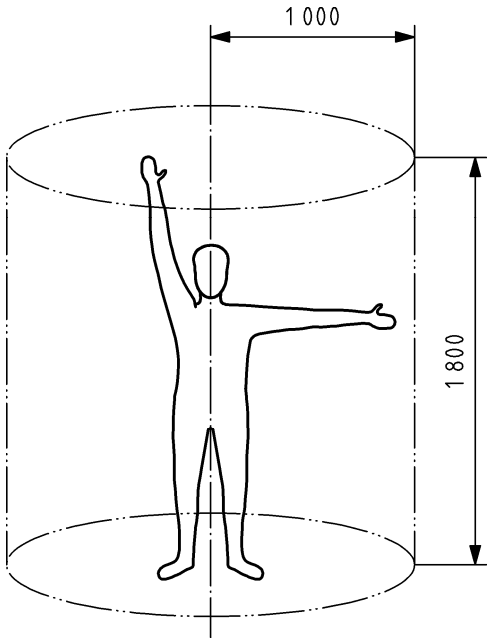

b) Standing user

Figure 16 — Cylindrical space

Table 3 — Dimensions of the cylinder for the determination of the free space

Dimensions in millimetres

Type of use	Radius	Height
Standing	1 000	1 800
Sitting	1 000	1 500
Hanging	500	300 above and 1 800 below hanging grip position
NOTE In case of hanging, h = 300 mm because of the possibility that the users pull themselves up (see Fig 16a)).		

NOTE 2 In certain cases, the dimensions of the free space can be altered. In some cases, these will be given in the parts of this standard covering individual types of equipment.

4.2.8.2.4 Extent of the impact area

Dimensions of the impact area are shown in Figure 17.

In certain cases, such as a carousel giving the user a horizontal speed, the impact area may be extended to provide adequate protection against falling injuries.

In determining the impact area the possible movements of the equipment and the user shall be taken into account.

NOTE These cases are also covered in the parts of this standard covering individual types of equipment.

Dimensions in metres

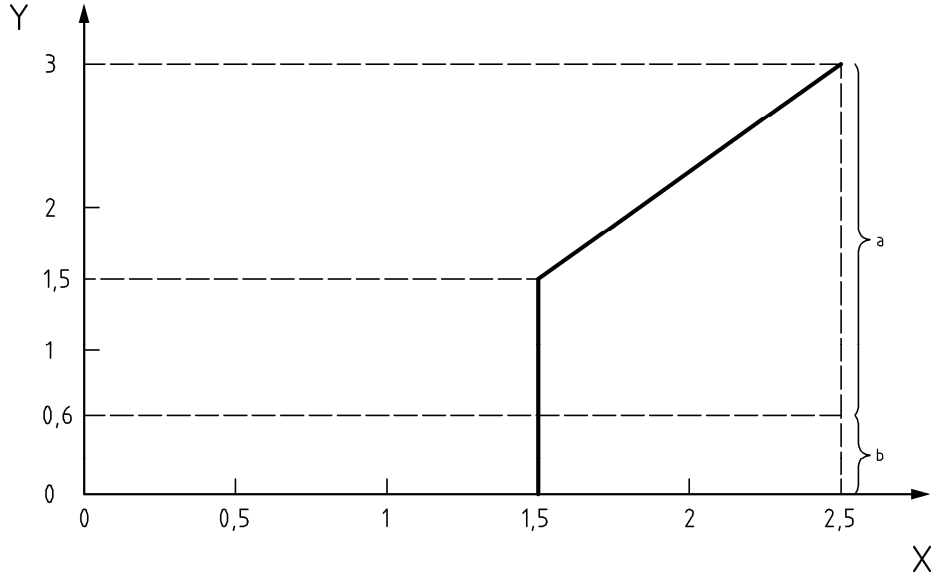

If 0,6 ≤ y ≤ 1,5 then x = 1,5 (in metres)
If y >1,5, then x = 2/3 y + 0,5

Key
Y free height of fall
X minimum dimension of impact area
a impact attenuating surface with requirements (4.2.8.5.2)
b surface with no requirements, unless there is forced movement (4.2.8.5.3)

Figure 17 — Extent of the impact area

4.2.8.2.5 Extent of the falling space

Unless otherwise specified, the extent of the falling space shall be at least 1,5 m around elevated parts of the equipment, measured horizontally and extending from the vertical projection plane below the equipment.

The falling space shall increase for free heights of fall above 1,5 m together with the extent of the impact area (see 4.2.8.2.4). This requirement can be varied in certain cases, e.g. increased, in the case of forced movement or reduced, in the case of equipment installed on or against a wall or fully enclosed equipment.

In most cases there may be overlapping of falling spaces including impact areas. Unless specified in other parts of this standard, overlapping of the falling space where forced movement exists should not occur.

Examples of falling space are given in Figures 18 and 19.

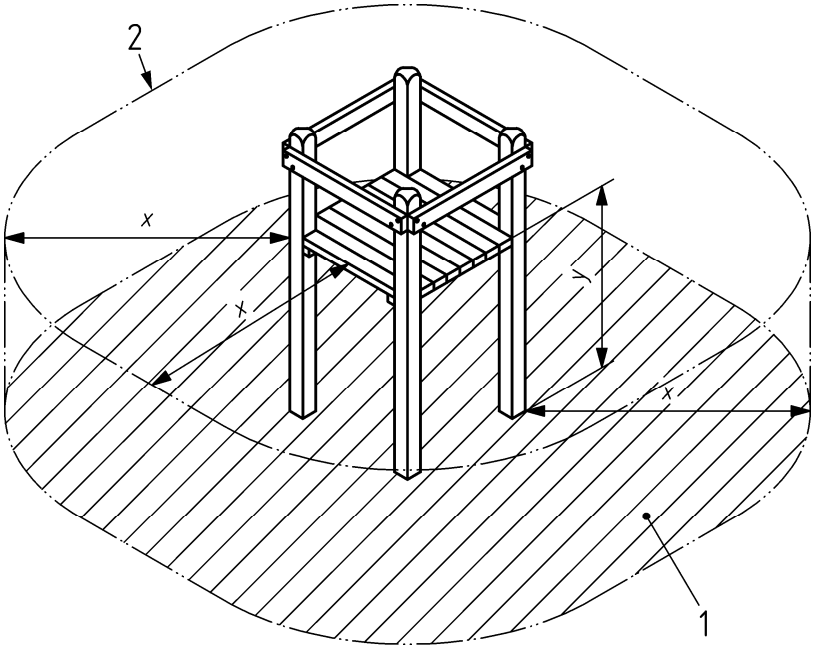

Key

1 impact area
2 falling space
x extent of falling space
y height of falling space

Figure 18 — Example of falling space and impact area of a platform

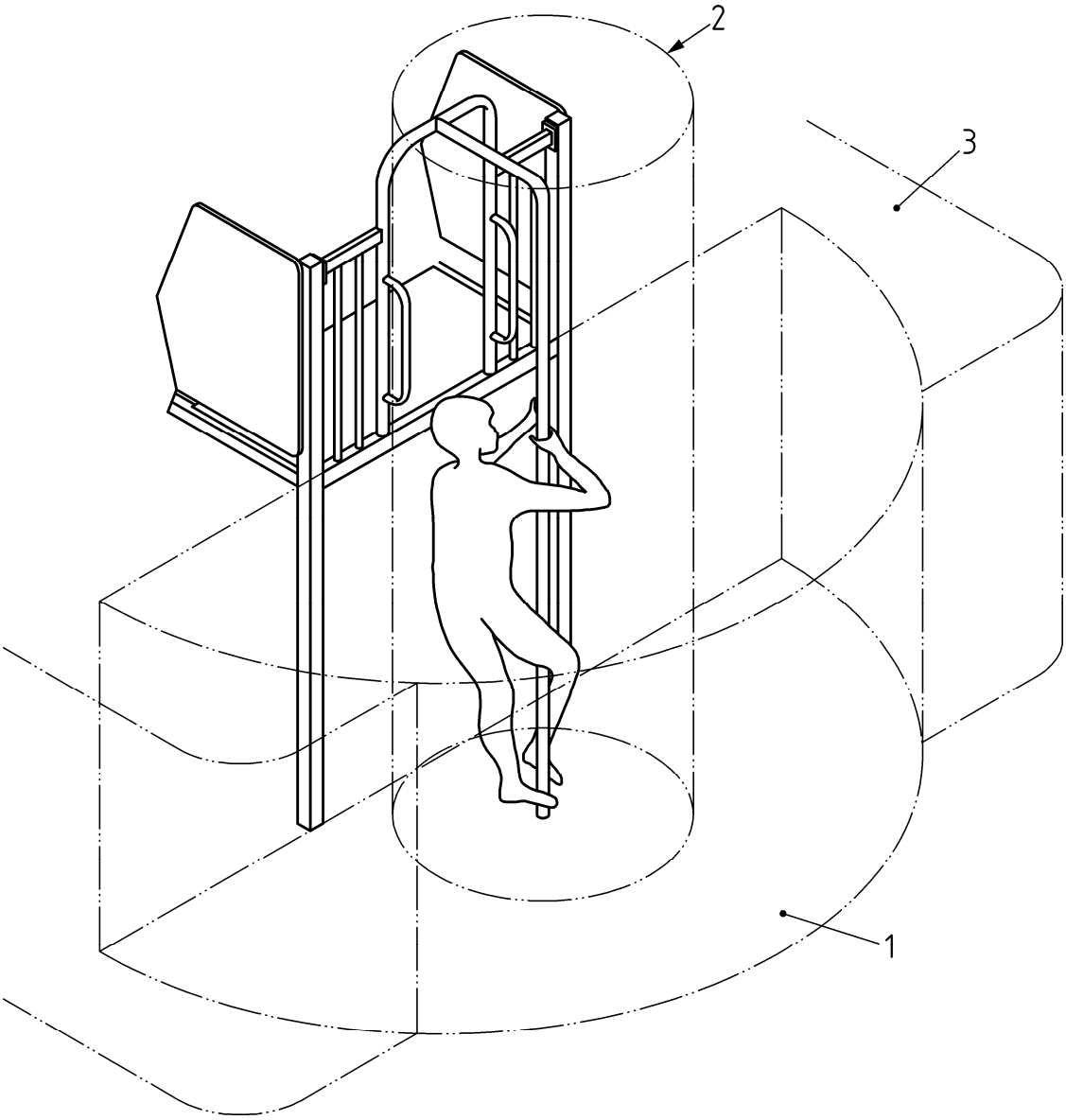

Key
1 falling space of the fireman's pole
2 free space of the fireman's pole
3 falling space of platform

Figure 19 — Example of falling space and free space of a fireman's pole

4.2.8.3 Protection against injuries in the free space for users undergoing a movement that is forced by the equipment

Unless stated otherwise, there shall be no overlapping of adjacent free spaces, or of free space and falling space.

NOTE 1 This requirement does not apply to the common space between pieces of equipment in a cluster.

The free space shall not contain any obstacles that interfere with the passage of a user whilst undergoing a forced movement e.g. tree branches, ropes, cross beams etc. Parts of the equipment bearing or containing the user, or helping the user to keep balance, shall be permitted within the free space, e.g. a platform with a fireman's pole (see 4.2.8.2.3).

NOTE 2 Exceptions to this requirement are given in the parts of this standard covering individual types of equipment.

The free space shall not be intersected by main travelling routes at, or through, the playground (e.g. pedestrian pathway).

4.2.8.4 Protection against injuries in the falling space

The falling space shall not contain any obstacles onto which a user could fall and cause injuries, e.g. posts not flush with adjacent parts or exposed foundations (see 4.2.14).

NOTE 1 The intention of this requirement is not to protect the user from minor knocks or bumps, that might lead to a bruise or sprain etc., as these types of injuries are possible in all situations.

The following parts of play structures may be in the falling space:

— adjacent parts of play structures with a difference in free height of fall of less than 600 mm;

— parts of the equipment bearing or containing the user, or helping the user to keep balance;

— parts of the equipment with an inclination of 60° or more from the horizontal.

NOTE 2 In this case a falling user would only make a glancing contact with the equipment part.

4.2.8.5 Protection against injuries from the surface of the impact area

4.2.8.5.1 General

The surface of the impact area shall be free from sharp edged parts or projections and shall be installed without creating any entrapment situation (see 4.2.7).

If loose particulate material is used it shall be installed to a layer thickness of 100 mm more than that determined by testing to EN 1177 to achieve the required critical fall height.

NOTE This is to allow for displacement through use.

4.2.8.5.2 Equipment with a free height of fall greater than 600 mm or with forced movement

Beneath all playground equipment with a free height of fall of more than 600 mm and/or equipment causing a forced movement on the body of the user (e.g. swings, slides, rocking equipment, cableways, carousels, etc.), there shall be impact attenuating surfacing over the entire impact area.

The critical fall height of the surfacing shall be equal to, or greater than, the free height of fall of the equipment.

Examples for commonly used impact attenuating materials are given in Table 4 with the related critical fall heights, tested in accordance with EN 1177 and measured partly on site and partly in the laboratory with different test conditions. For material specifications and thicknesses not covered by Table 4, EN 1177 shall be used as the method of test for the determination of the critical fall height.

The extent of the impact area is given in 4.2.8.2.4.

NOTE 1 Turf as well as having aesthetic appeal also has some useful impact-attenuating properties. Experience has shown that, if well maintained, it is normally effective for fall heights up to 1m and can be used without the need to conduct a test. For fall heights above 1m, the performance of turf as an impact-attenuating surface is dependant upon local climatic conditions. Therefore as there are significant regional variations in climate throughout Europe it is recommended that guidelines are given at a national level.

NOTE 2 Impact attenuating materials are tested under specific conditions; therefore the performance of these materials may vary in use (e.g. materials under frozen conditions).

NOTE 3 Specific requirements for equipment causing a forced movement on the body of the user (e.g. swings, slides, rocking equipment etc.) are covered in other parts of EN 1176.

NOTE 4 Impact-attenuating materials should be adequately maintained. Failure to maintain such surfaces will result in the impact attenuation being significantly reduced.

Table 4 — Examples of commonly used impact attenuating materials, depths and corresponding critical fall heights

Material [a]	Description	Minimum depth [b]	Critical fall height
	mm	mm	mm
Turf/topsoil			≤ 1 000 [d]
Bark	20 to 80 grain size	200	≤ 2 000
		300	≤ 3 000
Woodchip	5 to 30 grain size	200	≤ 2 000
		300	≤ 3 000
Sand [c]	0,2 to 2 grain size	200	≤ 2 000
		300	≤ 3 000
Gravel [c]	2 to 8 grain size	200	≤ 2 000
		300	≤ 3 000
Other materials and other depths	As tested to HIC (see EN 1177)		Critical fall height as tested

[a] Materials properly prepared for use in children's playgrounds

[b] For loose particulate material, add 100 mm to the minimum depth to compensate for displacement (see 4.2.8.5.1)

[c] No silty or clay particles. Grain size can be identified by use of a sieve test, such as EN 933-1

[d] See NOTE 1 in 4.2.8.5.2

4.2.8.5.3 Equipment with a free height of fall not exceeding 600 mm and without forced movement

It is not necessary to test the critical fall height of a surface beneath playground equipment having a free fall height of less than 600 mm and which does not cause forced movement on the body of the user.

4.2.8.5.4 Adjacent platforms

If the free height of fall between adjacent platforms is more than 1m, the upper surface of the lower platform shall present the necessary impact attenuating properties.

4.2.8.6 Protection against injuries due to other types of movement

The space in, on or around the equipment that can be occupied by the user shall not contain any obstacles that the user is not likely to expect and which could cause injuries if hit by the user.

NOTE Examples of such obstacles are shown in Figure 20.

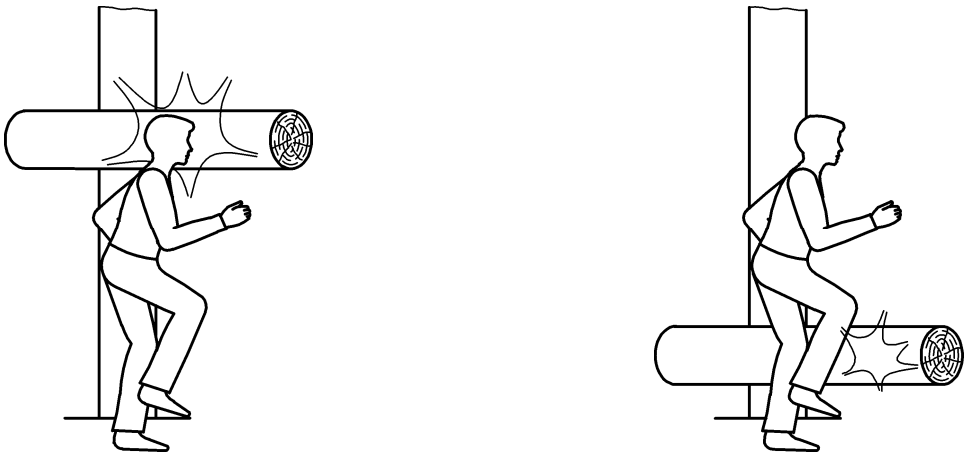

a) b)

Figure 20 — Unexpected obstacles

4.2.9 Means of access

4.2.9.1 Ladders

The spacing of the rungs or steps shall conform to the head entrapment requirements given in 4.2.7.2.

Rungs and steps shall be non-rotating and equally spaced.

Equal spacing is required only between the rungs. It is not required between the highest rung and the platform or the ground and the first rung. The requirement for equal spacing does not apply to rope ladders.

NOTE To assist the safe transfer from the ladder to the platform or its summit, the styles of the ladder without the rungs or steps can continue vertically from the platform to the top of the barrier.

Wooden components shall have positive connections that cannot be undone or shifted. Nails or wood screws shall not be used as the only form of connection.

To allow for the foot to rest correctly on the rung or step there shall be an unobstructed space at the rear of the ladder of at least 90 mm from the centre of the rung or tread measured at 90° to the ladder.

Rungs and steps shall be horizontal to within ± 3°.

Ladders shall have rungs and/or styles that conform to the requirements for grasp given in 4.2.4.7 or shall have handrails that conform to the requirements for grip given in 4.2.4.6.

4.2.9.2 Stairs

Stairs shall conform to the requirements of 4.2.4 concerning protection against falling.

For stairs leading to platforms up to 1 m in height a guardrail may replace the barrier, providing the gap beneath the guardrail is less than 600 mm when measured from the middle of the tread.

Guardrails and/or barriers shall be provided from the first step and shall conform to the requirements for grasp (4.2.4.7).

Where a set of stairs is higher than 1 m and of a greater inclination than 45°, the barrier shall comply with the requirements for grasp or a handrail shall be provided.

NOTE Panel type barriers with a thickness of less than 60 mm is considered in compliance with grasp requirements.

The inclination of stairs shall be constant and the stairs shall have at least three risers. Openings shall conform to the entrapment requirements given in 4.2.7.2. The treads shall be spaced equally, shall be of uniform construction, and shall be horizontal within ± 3°.

To provide adequate space for standing, the minimum projection of tread shall be 140 mm and the minimum depth of tread shall be 110 mm, (see Figure 21).

Dimensions in millimetres

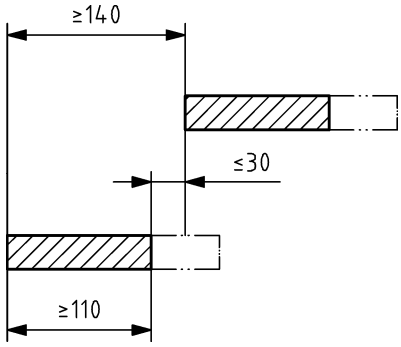

Figure 21 — Minimum projection and depth of tread

Where the overall height of the set of stairs is more than 2 000 mm above ground level, intermediate landings shall be provided at height intervals not exceeding 2 000 mm. The line of the stairs shall not be continuous, but shall be offset by at least the width of the set of stairs, or shall change direction by at least 90°. Intermediate landings shall be at least as wide as the set of stairs and at least 1 000 mm long.

4.2.9.3 Ramps

Ramps shall be inclined at an angle of up to 38° to the horizontal and shall be of a constant angle.

NOTE 1 Surfaces with a greater inclination are not regarded as ramps but can be used as a means of access.

Ramps shall conform to the requirements of 4.2.4.

For ramps leading to platforms up to 1 m in height a guardrail may replace the barrier, providing the gap beneath the guardrail is less than 600 mm. Guardrails shall be provided from the beginning of the ramp.

Ramps shall be level within ± 3° across their width. To reduce the risk of slipping, ramps expected to be used by all children shall include means to improve the grip of the foot.

NOTE 2 This can be achieved by use of suitable foot holds.

4.2.9.4 Steep play elements

For steep play elements provided on easily accessible parts of equipment the opening in the barrier shall be 500 mm maximum and the free height of fall of the platform shall be 2 000 mm maximum.

NOTE This is to help the supervisor reach up to the user if necessary.

4.2.9.5 Easily accessible playground equipment

Ladders are a means of easy access to the equipment, unless the first rung is greater than 400 mm from the ground surface.

Stairs are a means of easy access to the equipment.

Ramps are a means of easy access to the equipment.

Tiered platforms with a height difference less than 600 mm are considered to be a means of easy access to the equipment.

NOTE There are other forms of access that can be designed to reduce the ease of movement to make access more difficult and to give more time to supervisors to intervene as appropriate.

4.2.10 Connections

Connections shall be secured such that they cannot come loose of their own accord unless specifically designed to do so.

Connections shall be safeguarded so that they cannot be undone without tools.

4.2.11 Consumable components

Components subjected to wear or designed to be renewed during the life of the equipment, for example bearings, shall be capable of being replaced.

Replaceable components should be protected against unauthorized intervention and should require little maintenance. Any lubricants leaking out should not soil the equipment or adversely affect its safe use.

4.2.12 Ropes

4.2.12.1 Ropes fixed at one end

For suspended ropes between 1 m and 2 m in length, the distance between ropes fixed at one end and fixed equipment shall be not less than 600 mm and the distance between ropes fixed at one end and swinging equipment shall be not less than 900 mm.

Ropes fixed at one end shall not be combined with swings in the same bay (see EN 1176-2).

For suspended ropes of between 2 m and 4 m in length, the distance between ropes fixed at one end and other parts of equipment shall be not less than 1 m.

The rope diameter shall be between 25 mm and 45 mm.

NOTE A stiffer rope, depending on its diameter and construction, will make it more difficult to create a loop, thus reducing the risk of strangulation. However, it will still allow good grip.

4.2.12.2 Ropes fixed at both ends (climbing ropes)

For a rope fixed at both ends, typically for climbing up and not part of a larger net structure, it shall not be possible to make a loop in the rope that is wide enough to let probe C pass through (see Figure D.1).

NOTE 1 This requirement is intended to remove the risk of strangulation.

The rope diameter shall meet the grip requirements given in 4.2.4.6.

NOTE 2 The rope should be rough enough to allow for a good grip and should be stiff enough to reduce the risk of strangulation. This can be achieved, for example, by using outer strands with a diameter of at least 6 mm.

When a rope fixed at both ends is used in conjunction with another element, care shall be taken not to create entrapment situations, see 4.2.7.2.

4.2.12.3 Wire ropes

Wire ropes shall be unstressed and shall be made from galvanized or corrosion-resistant wire.

Ferrules shall conform to EN 13411-3 and the rope end shall coincide with the edge of the grip.

Wire rope grips shall be utilized in accordance with EN 13411-5. If accessible and the thread ends protrude more than 8 mm, they shall only be used outside the minimum space or shall be covered by suitable means.

The ends of the turnbuckles shall be closed (see Figure 22) and shall be made from corrosion-resistant material. It shall not be possible to undo turnbuckles without a tool.

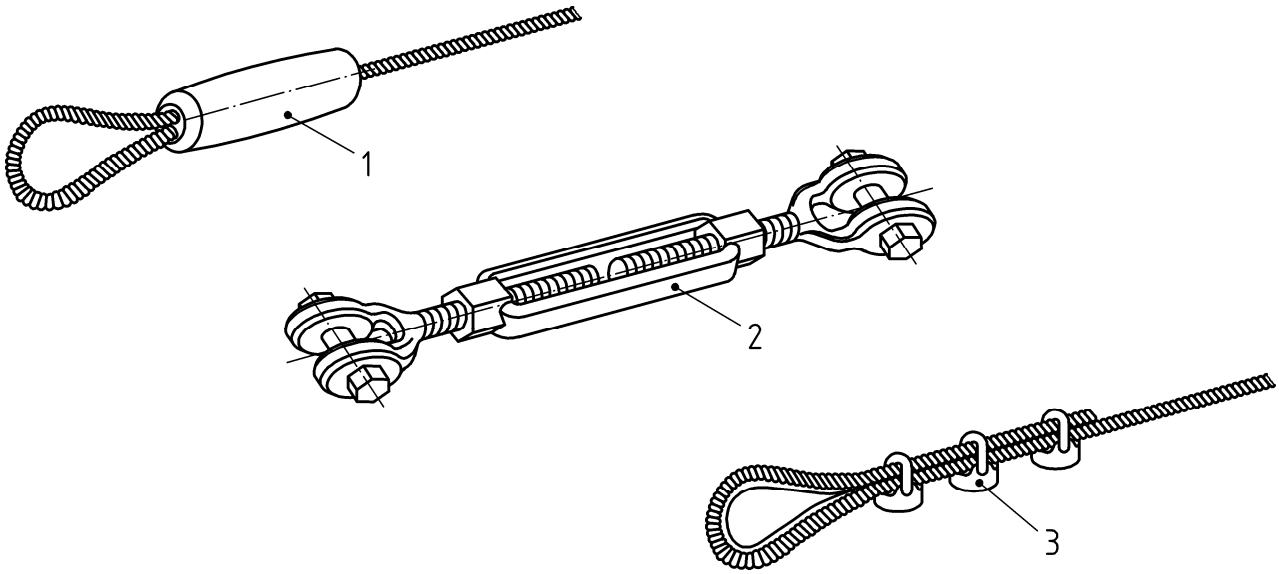

Key
1 ferrule
2 turnbuckle
3 wire rope grips

Figure 22 — Example of ferrules, turnbuckles and wire rope grips

4.2.12.4 Sheathed wire ropes

When sheathed wire ropes are used for climbing ropes, climbing nets, hanging ropes and the like, each strand shall be sheathed with yarn made from synthetic or natural fibres. The sheath shall not contain monofilament or split yarns.

NOTE The wires inside the strands make it more difficult for the ropes to be damaged and thus reduce any hazards.

4.2.12.5 Fibre ropes (textile type)

Fibre ropes shall either:

a) conform to EN ISO 9554 or EN ISO 2307, or

b) manufacturer shall supply a works certificate stating the material used and the safe working load.

In the case of climbing ropes, climbing nets, hanging ropes and the like, the strands shall have a soft and non-slip covering, e.g. hemp or equivalent material.

Monofilament plastic ropes or ropes made from similar materials shall not be used.

4.2.13 Chains

Chains for playground equipment shall conform to ISO 1834 as a minimum and shall have a maximum opening of 8,6 mm in any one direction except where connections are made, where the maximum opening shall be greater than 12 mm or less than 8,6 mm.

4.2.14 Foundations

The foundations shall be designed such that they do not present a hazard (tripping, impact). In loose fill surfaces (e.g. sand), foundations shall be installed or laid in accordance with one of the following:

a) so that pedestals. footings and fixing elements on the equipment are at least 400 mm below the playing surface or;

b) if the tops of the foundations are as shown in Figure 23 at least 200 mm below the surface: or

c) so that they are covered by items of equipment or equipment parts (e.g. central foundation of a roundabout.)

Any parts that protrude from the foundations such as the ends of screws, shall be at least 400 mm below the playing surface unless they are effectively covered and finished as described in 4.2.5.

Additional measures should be taken for equipment in which the stability depends on only one cross section.

NOTE When components are embedded in concrete there is a risk of corrosion or rotting. The high rate of corrosion or rotting under dynamic loading endangers the stability of the anchorage of units in which the stability depends on only one cross section, or in which the stability is provided by two-legged members or rows of members.

Linear dimensions in millimetres

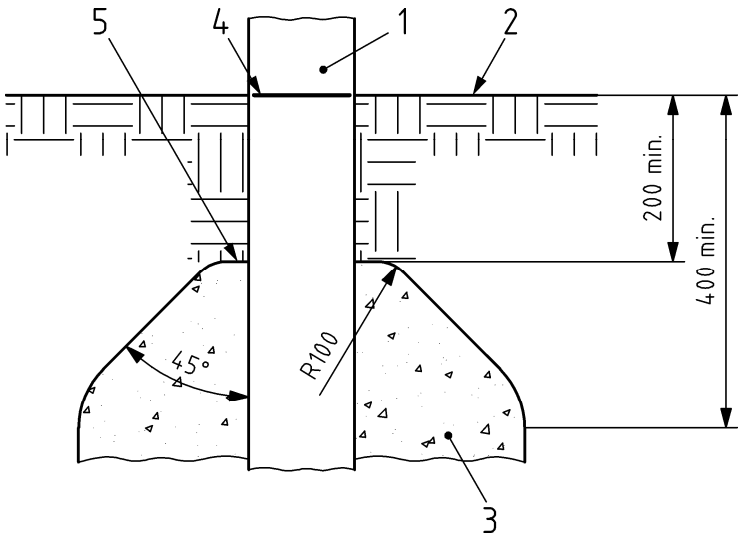

Key
1 post
2 playing surface
3 foundation
4 basic level mark
5 top of foundation

NOTE The basic level mark given by the manufacturer on the equipment shows the level of the playing surface. This basic level should be maintained.

Figure 23 — Example of foundations

4.2.15 Heavy suspended beams

Suspended beams are deemed heavy when they have a mass of 25 kg or more.

There shall be a ground clearance of at least 400 mm underneath heavy suspended beams, (see Figure 24).

The ground clearance is measured as the distance between the lowest point of the lower edge of the heavy suspended beam and the surface below.

The heavy suspended beam shall be so constructed that all changes in the profile of the beam shall have a radius of at least 50 mm.

The range of movement (*a* in Figure 24) shall not exceed 100 mm and shall not go beyond the support posts.

The distance between the support posts and the heavy suspended beam (*b*) shall not be less than 230 mm throughout its full range of movement.

Dimensions in millimetres

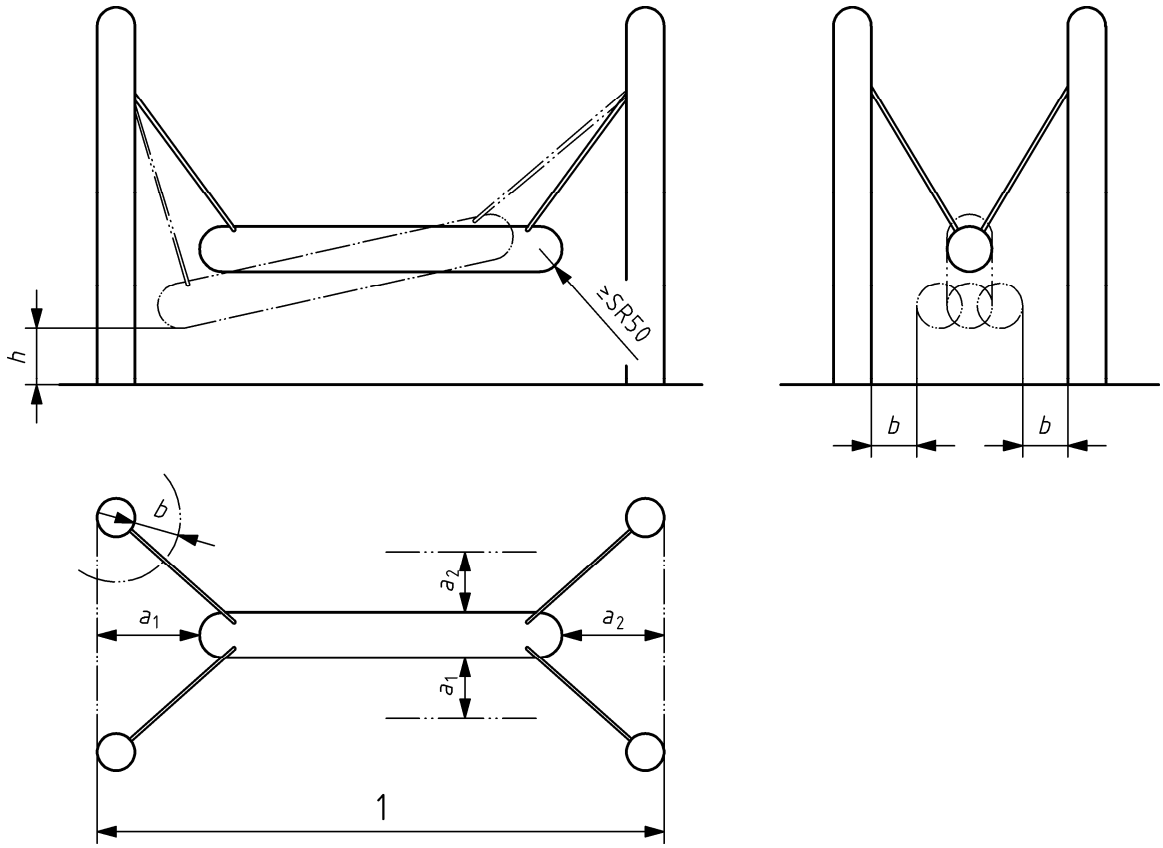

Key

h ground clearance

a range of motion, $a_1 + a_2 \leq 200$ mm

b free space towards standing construction, ≥ 230 mm

1 maximum deflection

Figure 24 — Example of a heavy suspended beam

5 Test methods and reports

Unless otherwise specified the requirements of Clause 4 shall be verified by measurement, visual examination or practical tests.

Before testing, the equipment shall be assembled in accordance with the manufacturer's instructions into a condition similar to its position of use.

Test reports shall include the following:

a) number and date of this European Standard, i.e. EN 1176-1:2008;

b) details of the equipment tested;

c) details of the condition of the equipment including any defects observed before the test;

d) details of any change in the condition of the equipment observed after the tests;

e) test result.

6 Information to be provided by the manufacturer/supplier

6.1 Information to be provided by the manufacturer/supplier of playground equipment

6.1.1 General product information

The manufacturer/supplier shall provide instructions in the appropriate language(s) of the country in which the equipment is to be installed and used. The instructions shall conform to the following:

a) instructions shall be printed legibly and in a simple form.

b) illustrations shall be used wherever possible; and

c) instructions shall include at least the following information:

   1) details of the installation, operation, inspection and maintenance of the equipment;

   2) clause or note drawing the operator's attention to the need to increase inspection/ maintenance if the equipment is subject to heavy use and /or the stability of the equipment relies on one post;

   3) advice to take care, in relation to specific hazards to children, due to incomplete installation or dismantling, or during maintenance.

NOTE The manufacturer/supplier should supply copies of test reports to purchasers upon request.

6.1.2 Pre-information

The manufacturer/supplier shall provide information concerning the safety of the installation prior to the acceptance of the order, e.g. a catalogue data sheet.

This information shall include at least the following, where relevant:

a) minimum space;

b) surfacing requirements (including free height of fall and extent of surfacing);

c) overall dimensions of the largest part(s);

d) mass of the heaviest part/section in kilograms;

e) guidance regarding the target user group for the equipment;

f) if the equipment is intended only for indoor use or under supervised conditions;

g) availability of spare parts; and

h) certification of conformity with this European standard.

6.1.3 Installation information

The manufacturer/supplier shall supply an equipment delivery parts list with the equipment.

The manufacturer/supplier shall supply installation instructions for the correct assembly, erection and placing of the equipment.

This information shall include at least the following:

a) minimum space requirements and safety clearances;

b) equipment and parts identification;

c) erection sequence (assembly instruction and installation details);

d) matching aids where necessary, e.g. signs on parts accompanied by appropriate instructions;

e) need for any special tools, lifting devices, templates or other assembly aids to be used and any precautionary measures to be taken. Where necessary, torque values should be given;

f) constructional space required to install the item of equipment;

g) orientation, where necessary, in relation to sun and wind;

h) details of the required foundation, under normal conditions, anchorage in the ground and the design and location of the foundation (with a note that care should be taken concerning abnormal conditions);

i) specific instructions if a particular landscape profile is necessary for safe operation, e.g. falling height;

j) free height of fall (for impact attenuation surfacing needs);

k) need for and details of the application of any painting or treatment; and

l) removal of assembly aids before the equipment is used.

Drawings and diagrams shall clearly specify the principal dimensions of the equipment and the relevant space, heights and areas required for installation.

The manufacturer/supplier shall supply the details necessary for inspection of the playground equipment prior to its first use.

6.1.4 Inspection and maintenance information

NOTE Attention is drawn to EN 1176-7.

6.1.4.1 The manufacturer/supplier shall provide instructions for maintenance (marked with the number of this standard), which shall include a statement that the frequency of inspection will vary with the type of equipment, e.g. equipment where the stability relies on one post, or materials used and other factors, e.g. heavy use, levels of vandalism, coastal location, air pollution, age of equipment.

The manufacturer/supplier shall also provide drawings and diagrams necessary for maintenance, inspection and checking of correct operation and, when appropriate, repair of the equipment.

6.1.4.2 The instructions shall specify the frequency with which the equipment or its components should be inspected or maintained and shall include guidance on the following, where relevant:

a) routine visual inspection (see 3.25);

NOTE 1 For playgrounds subject to heavy use or vandalism, daily inspection of this type may be necessary.

NOTE 2 Examples of visual and operational inspection points are: cleanliness, equipment ground clearances, ground surface finishes, exposed foundations, sharp edges, missing parts, excessive wear (of moving parts) and structural integrity.

b) operational inspection (see 3.26);

This should be every 1 to 3 months, or as indicated by the manufacturer's instruction.

Special attention should be given to 'sealed-for life' parts and equipment where stability relies on one post.

c) annual main inspection (see 3.27).

Special attention should be given to 'sealed-for life' parts and equipment where stability relies on one post.

NOTE 3 The annual main inspection may require excavation or dismantling of certain parts.

6.1.4.3 The instructions shall also specify the following:

a) if necessary, the servicing points and methods of servicing, e.g. lubrication, tightening of bolts, re-tensioning of ropes;

b) that replacement parts shall conform to manufacturer's specifications;

c) if special disposal treatment is required for some equipment or parts;

d) identification of spare parts;

e) any additional measures to be taken during the run-in period, e.g. tightening of fastenings, tensioning of ropes;

f) need to keep drainage holes clear;

g) that surfacing shall be maintained: in particular, the levels of loose fill materials;

h) that GRP (glass-reinforced plastics) should be replaced or repaired before the glass fibres become exposed through wear or damage. This particularly applies to slides.

6.2 Information to be provided by the manufacturer or supplier of impact-attenuating surfacing

6.2.1 Pre-information

Prior to the acceptance of the order the manufacturer or supplier shall provide information on the critical fall height of the impact-attenuating surfacing as tested in accordance with EN 1177.

6.2.2 Installation

The supplier of playground surfacing shall provide instructions on the correct installation.

6.2.3 Inspection and maintenance

The supplier of playground surfacing shall provide instructions on maintenance and inspection procedures.

6.2.4 Identification of impact-attenuating playground surfacing

The surfacing shall be labelled by the manufacturer or supplier, or written information shall be provided for its identification and performance.

7 Marking

7.1 Equipment identification

The equipment shall be marked legibly, permanently and in a position visible from ground level with at least the following:

a) name and address of manufacturer or authorized representative;

b) equipment reference and year of manufacture; and

c) the number and date of this European Standard, i.e. EN 1176-1:2008.

7.2 Basic level mark

Equipment shall be marked legibly and permanently with the basic level mark (see Figure 23).

Annex A
(normative)

Loads

A.1 Permanent loads

A.1.1 General

The permanent loads consist of

a) self weight of the structure and of the assemblies;

b) pre-stressing loads, e.g. space nets, cableways; and

c) mass of water if any water containers are involved.

A.1.2 Self weight

The self weight of the structure and assemblies shall be assessed.

A.1.3 Pre-stressing loads

Pre-stressing loads are considered to be permanent loads. The maximum and minimum pre-stressing loads have to be considered.

NOTE Because of creep or relaxation, pre-stress is time dependent. It could be necessary to verify two situations:

a) initial pre-stress; and

b) end pre-stress.

A.1.4 Mass of water

The highest and lowest possible water levels in the container shall be considered.

A.2 Variable loads

A.2.1 General

The variable loads consist of:

a) user loads;

b) snow loads;

c) wind loads;

d) temperature loads; and

e) specific loads.

A.2.2 User loads

The loads resulting from users of playground equipment shall be based on the following load system:

a) total mass

$$G_n = n \times m + 1{,}64 \times \sigma \sqrt{n} \qquad \text{(A.1)}$$

where

G_n is the total mass of n children, in kilograms;

n is the number of children on the equipment or part thereof, as given in A.3;

m is the mean mass of a child in a specified age group;

σ is the standard deviation of the age group concerned.

NOTE 1 For open public and private playgrounds the following values can be used:

m = 53,8 kg σ = 9,6 kg.

These values are based on data for children of 14 years of age. However the calculated loads include safety factors, which ensure structures may also be used by adults.

NOTE 2 For playgrounds with supervision open to well defined age groups only (e.g. day-care centres), the following values can be used:

— age up to 4 years: m = 16,7 kg σ = 2,1 kg;

— age up to 8 years: m = 27,9 kg σ = 5,0 kg;

— age up to 12 years: m = 41,5 kg σ = 7,9 kg.

NOTE 3 The mass of children up to 14 years is based on the anthropometric data of age group 13,5 to 14,5 years, including 2 kg for clothing. For the other age groups, the mass includes 0,5 kg, 1 kg and 1,5 kg for clothing for 4, 8 and 12 years respectively.

b) dynamic factor

$$C_{dyn} = 1 + 1/n \qquad \text{(A.2)}$$

where

C_{dyn} is a factor representing the load caused by movement (running, playing, etc.) of the users, including material behaviour under impact loading;

n is as given in a).

c) total vertical user load

$$F_{tot;v} = g \times G_n \times C_{dyn} \qquad \text{(A.3)}$$

where

$F_{tot:v}$ is the total vertical user load on the equipment caused by n children, in Newtons;

g is the acceleration due to gravity (10 m/s^2);

G_n is as given in a);

C_{dyn} is as given in b).

NOTE 4 Calculated examples are given in Table A.1 for information.

Table A.1 — Total vertical load for playground intended for use by children of all ages

Number of users n	Mass of n users G_n kg	Dynamic factor C_{dyn}	Total vertical user load $F_{tot;\,v}$ N	Vertical load per users $F_{1;\,v}$ N
1	69,5	2,00	1 391	1 391
2	130	1,50	1 948	974
3	189	1,33	2 516	839
5	304	1,20	3 648	730
10	588	1,10	6 468	647
15	868	1,07	9 259	617
20	1 146	1,05	12 033	602
25	1 424	1,04	14 810	592
30	1 700	1,03	17 567	586
40	2 252	1,025	23 083	577
50	2 801	1,02	28 570	571
60	3 350	1,017	34 058	568
∞		1,00		538
NOTE At infinity the vertical load per user equals the average mass.				

d) total horizontal user load

The total horizontal user load is 10 % of the total vertical user load in accordance with A.2.2c) and acts on the same level, together with the vertical load:

$$F_{tot;\,h} = 0{,}1\ F_{tot;v} \qquad \text{(A.4)}$$

NOTE 5 This load allows for movement of children playing and inaccuracies in the structure.

e) distribution of user loads

The user loads are uniformly distributed over the element considered as follows:

1) point loads: $F = F_{tot}$ in Newtons; (A.5)
F is acting on an area of 0,1 m × 0,1 m;

2) line loads: $q = F_{tot}/L$ in Newtons per metre; (A.6)
where: L is in accordance with A.3.3;

3) area loads: $p = F_{tot}/A$ in Newtons per metre squared; (A.7)
where: A is in accordance with A.3.4;

4) volume loads: $q = F_{tot}/L$ in Newtons per metre; or (A.8)

$p = F_{tot}/A$ in Newtons per metre squared. (A.9)

NOTE 6 Volume loads are expressed either in line loads or area loads, depending on the type of elements that form the structure.

A.2.3 Snow loads

Snow loads shall be taken from EN 1991-1-3, allowing for a reference period of 10 years.

A.2.4 Wind loads

Wind loads shall be taken from EN 1991-1-4, allowing for a reference period of 10 years.

A.2.5 Temperature loads

Temperature loads shall be taken from EN 1991-1-2, allowing for a reference period of 10 years.

A.2.6 Specific loads

A.2.6.1 Swing seats

The number of users n on a swing seat in motion shall be calculated from:

a) for a traditional swing n = 2;

b) for a gondola, n shall be calculated as given in A.3;

c) for a single point swing n = L/0,6 with $n \geq 2$;

where

L is the total length of the outer edge of the swinging platform in metres.

The forces caused by motion of swings shall be considered for all the most onerous positions relevant for the element being considered.

The user loads in accordance with A.2.2 c) and d) need not be considered.

NOTE 1 In the case of swings, the mass can be considered as being uniformly distributed on the equipment between the points of support.

The maximum swing angle $\alpha_{max.}$ considered for swing seats suspended from ropes or chains is 80° from the vertical position.

NOTE 2 In Annex B the method to be used for calculating the forces resulting from the motion of a swing is included. A worked example is also given.

A.2.6.2 Carousels

The number of users on a carousel shall be the highest number calculated from:

a) number of seats, as given in A.3.3 where L_{pr} is the total length of the seats; or

b) platform dimensions, as given in A.3.4 where A_{pr} is the area of the platform.

For carousels, two load cases shall be considered for the user loads:

c) the load F_{tot} is evenly distributed over the entire carousel;

d) the load F_{tot} (½ L_{pr} or ½ A_{pr}) is evenly distributed over one half of the carousel.

NOTE Vertical and horizontal user loads act at the same time. Centrifugal forces need not be considered additionally, as they are covered by the horizontal user load.

A.2.6.3 Cableways

The maximum tension in the cable of a cableway shall be calculated for the situation where the users are swinging in a vertical direction in the middle of the cable.

The user loads as given in A.2.2 c) and d) need not be considered.

The maximum forces in the foundation of the cableway can be based on the static situation with the users in the middle of the cable.

The number of users n on a traditional cableway is n = 2.

NOTE In Annex B, a method that can be used for calculating the forces resulting from the motion of users suspended from a cableway is included. A worked example is also given.

A.2.6.4 Spatial networks

The number of users in a spatial network shall be calculated in accordance with A.3.5 on the basis of the volume V defined by the periphery of the spatial network.

For spatial networks two load cases shall be considered for the user loads as follows:

a) load F_{tot} (V) is equally distributed over the entire structure;

b) load F_{tot} (½ V) is equally distributed over one half of the structure.

A.2.6.5 Access ladders and stairs

The number of users on an access ladder or stair shall be calculated in accordance with A.3.3 on the basis of the sum of the length of all rungs or treads.

A.2.6.6 Barriers and guard rails

The horizontal load on barriers and guard rails is 750 N/m acting in a horizontal direction on the top rail.

A.2.6.7 Seats

The number of users on a seat is the highest value of the following:

a) one user, the load to be treated as a point load;

b) number specified in this standard for specific equipment; the load to be treated as a distributed load; or

c) number calculated as given in A.3.2.

A.2.6.8 Lateral protection of slides

The vertical and horizontal loads applied to the lateral protections of slides are given in A.2.2.

A.3 Number of users on the equipment

A.3.1 General

Calculate the number of users for each structural element likely to be loaded by users.

The calculated number shall be rounded up to the next whole number.

NOTE Rounding up in this context means that 3,13 becomes 4,0, for example.

A.3.2 Number of users on a point

Unless stated differently elsewhere in this part of EN 1176, the number of users, n, on a point is as follows:

$n = 1$.

Every single point of playground equipment for standing, walking or climbing upon, or a flat surface greater than 0,1 m wide and which has less than a 30° angle from the horizontal, shall be able to carry the load caused by one user.

NOTE This also applies to rungs or steps for supporting the user's feet

A.3.3 Number of users on line type elements

The number of users, n, on a line shall be calculated from the following:

a) line elements with an inclination up to and including 60°:

$$n = L_{pr}/0{,}6; \quad \text{(A.10)}$$

b) line elements with an inclination greater than 60°:

$$n = L/1{,}20. \quad \text{(A.11)}$$

where

L is the length of the element in metres;

L_{pr} is the length of the element projected down to a horizontal plane, in metres.

Line type elements are rungs in ladders and in climbing frames, poles and ropes.

A.3.4 Number of users on an area

The number of users, n, on a surface area shall be calculated from the following:

a) planes with inclination up to and including 60°:

$$n = A_{pr}/0{,}36; \quad \text{(A.12)}$$

b) planes with inclination greater than 60°:

$$n = A/0{,}72. \quad \text{(A.13)}$$

where

A is the area, in metres squared;

A_{pr} is the area projected down to a horizontal plane, in metres squared.

Area type elements are platforms, lattice type platforms, ramps and nets.

The width of the plane shall be greater than 0,6 m. Planes having a smaller width shall be treated as line type elements.

Where these types of element can be used from both sides, e.g. nets or grids, the number of children, n, shall be based on the area of one side only. These types of element will not be loaded as densely as platforms.

A.3.5 Number of users in a volume

The number of users, n, in a volume shall be calculated from the following:

— for volumes $V \leq 4{,}3$ m^3: $n = V/0{,}43$; (A.14)

— for volumes 4,3 m^3 < $V \leq 12{,}8$ m^3: $n = 10 + (V - 4{,}3)/0{,}85$; (A.15)

— for volumes $V > 12{,}8$ m^3: $n = 20 + (V - 12{,}8)/1{,}46$. (A.16)

where

V is the volume defined by the periphery of the playground equipment in cubic metres.

The volume is used to determine the maximum number of users on playground equipment, e.g. climbing frames, spatial networks.

NOTE The volumes mentioned are based on the following dimensions:

a) 0,60 m × 0,60 m × 1,20 m = 0,43 m^3;

b) 0,75 m × 0,75 m × 1,50 m = 0,85 m^3;

c) 0,90 m × 0,90 m × 1,80 m = 1,46 m^3.

Annex B
(normative)

Method of calculation of structural integrity

B.1 General principles: Limit state

B.1.1 Limit state

Each structure and structural element, e.g. connections, foundations, supports, shall be calculated taking into account the load combinations of B.2.

The preferred method of calculation shall be based on the general principles and definitions for limit states as specified in the appropriate structural Eurocodes.

Well established technical rules and methods of construction practice, other than this method, may be used provided that the level of safety is at least the same.

NOTE Limit states are states beyond which the structure no longer conforms to this part of EN 1176.

In symbolic form, a limit state can be written as:

$$\gamma_F \times S \leq R/\gamma_M \qquad \text{(B.1)}$$

where

γ_F is a partial safety factor for loads;

γ_M is a partial safety factor for materials;

S is load effect;

R is the resistance of the structure.

To allow for uncertainties in the actual loads and in the model used for determining loads, loads are multiplied by a partial safety factor for loads (γ_F).

To allow for uncertainties in the actual material properties and in the models used for determining forces in the structure, the strength of the structure is divided by a partial safety factor for materials (γ_M).

In most cases, the symbolic representation given here cannot be used to represent the limit state because the actual formulation is often non-linear, e.g. in cases where loads have to be combined.

B.1.2 Ultimate limit state

Ultimate limit states requiring consideration include:

a) loss of equilibrium of the structure or any part of it, considered as a rigid body;

b) failure by excessive deformation, rupture, or loss of stability of the structure or any part of it.

NOTE Ultimate Limit states are those associated with collapse, or with other forms of structural failure, which can endanger the safety of people.

B.1.3 Serviceability limit state

Where serviceability requirements are made, the preferred method of calculation shall be based on the principles for serviceability limit state as specified in the appropriate structural Eurocodes.

The deflection criteria for serviceability limit states mentioned in the appropriate Eurocodes do not apply to playground equipment.

NOTE Serviceability limit states correspond to states which do not conform to specified service criteria.

B.2 Load combinations for static analysis

The following load combinations shall be used for verification:

$$\gamma_{G;c} \times G + \gamma_{Q;c} \times Q_i \qquad \text{(B.2)}$$

where

G is the permanent load as given in A.1;

Q_i is one of the variable loads as given in A.2.2 to A.2.6;

$\gamma_{G;c}$ is a partial safety factor for permanent loads to be used in calculations;

$\gamma_{Q;c}$ is a partial safety factor for variable loads to be used in calculations.

The following partial safety factors for loads shall be used:

$\gamma_{G;c}$ = 1,0 for favourable effects;

$\gamma_{G;c}$ = 1,35 for unfavourable effects;

$\gamma_{Q;c}$ = 0 for favourable effects;

$\gamma_{Q;c}$ = 1,35 for unfavourable effects.

NOTE It is not necessary to combine independent variable loads such as wind and user loads. Related loads acting in different directions, such as vertical and horizontal user loads, are combined.

B.3 Worked example of the calculation of user loads (without safety factors)

B.3.1 General

The application of the load system based on the number of users is demonstrated for a platform with ladder access, see Figure B.1.

Data:

Platform:

dimensions: 1 000 mm × 1 000 mm

Ladder:

length: 1 770 mm

number of rungs: 6

external width: 388 mm

internal width: 350 mm

angle: 76°

Barrier:

length: 4 × 1 000 mm

Dimensions in millimetres

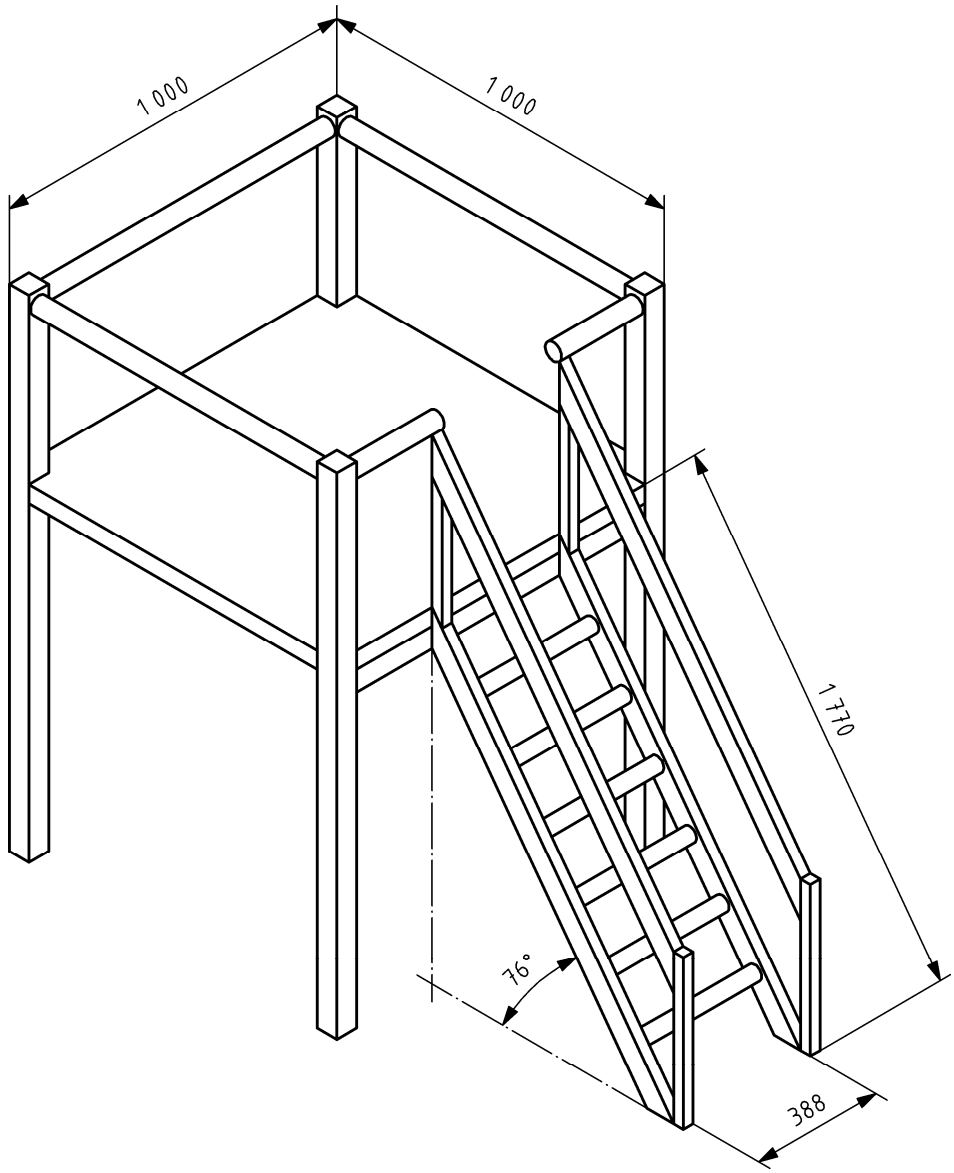

Figure B.1 — Platform with ladder

B.3.2 Platform

The number of users on the platform is calculated from A.3.4 (Equation A.12):

$n = A_{pr}/0{,}36 = 1{,}0/0{,}36 = 2{,}77$ rounded off upwards to $n = 3$.

The total vertical load on the platform follows from Table A.1:

$F_{tot;v} = 2\,516\ N$.

The horizontal user load on the platform (calculated from Equation A.4) is:

$F_{tot;h} = 0{,}1\ F_{tot;v} = 252\ N$.

B.3.3 Barrier

For the barrier, a line type element, two load cases are considered: the user load and the barrier load The number of users on one barrier (calculated from Equation A.10) is:

$n = L_{pr}/0{,}6 = 1{,}0/0{,}6 = 1{,}67$ rounded off upwards to $n = 2$.

The total vertical load (taken from Table A.1) is $F_{tot;v} = 1\,948$ N.

The line load on the barrier is:

$q_v = F_{tot;v}/L_{pr} = 1\,948$ N/m.

The horizontal load on the barrier is:

$q_h = 0{,}1 q_v = 195$ N/m.

NOTE This load is overruled by the barrier load and need not be considered further.

In accordance with A.2.6.6, the horizontal barrier load is 750 N/m.

B.3.4 Ladder

In accordance with A.3.2, each rung shall be able to carry one user:

$F_{tot;v} = 1\,391$ N.

The ladder in this example is an access ladder. In accordance with A.2.6.5, the number of users shall be calculated on the basis of the sum of the length of all rungs.

The total length of all rungs is: 6 × 0,35 m = 2,1 m.

The number of users is calculated in accordance with A.3.3 (Equation A.10):

$n = L_{pr}/0{,}6 = 2,\ 1/0{,}6 = 3{,}5$ rounded off upwards to $n = 4$.

The ladder shall be able to carry a load of four users [see A.2.2 c]:

$F_{tot;v} = 10 \times (4 \times 53{,}8 + 1{,}64 \times 9{,}6 \sqrt{4}) \times (1 + 1/4) = 3\,084$ N.

For convenience, Table A.1 may also be used:

$F_{tot;v} = 4 \times 839 = 3\,356$ N.

B.3.5 Complete structure

The load on the complete structure may be taken as the sum of the individual elements. However, it is permissible to take into account the reducing effect on the load of the increased number of users.

Platform:	$n = 2{,}77$
Barriers (4):	$n = 4 \times 1{,}67 = 6{,}68$
Ladder:	$n = 3{,}5$
Total:	$n = 12{,}95$
rounded off upwards to:	$n = 13$

The total vertical load on the structure in accordance with Table A.1 is:

$F_{tot;v}$ = 13 × 674 = 8 762 N.

NOTE 1 A more exact calculation on the basis of A.2.2 c) can also be made.

The total horizontal load on the structure, calculated in accordance with Equation A.4, is:

$F_{tot;h}$ = 0,1 $F_{tot;v}$ = 876 N.

NOTE 2 The total horizontal load consists of three (platform, barrier, ladder) smaller horizontal loads acting on different levels.

B.4 Calculation of forces acting on a swing seat

For the swing seat shown in Figure B.2, the forces caused by motion are:

$$F_h = C_h \times g \times (G_n + G_s); \quad \text{(B.3)}$$

$$F_v = C_v \times g \times (G_n + G_s); \quad \text{(B.4)}$$

$$F_r = C_r \times g \times (G_n + G_s). \quad \text{(B.5)}$$

where

F_h is the horizontal load on the assembly (in Newtons);

F_v is the vertical load on the assembly (in Newtons);

F_r is the resulting load on the assembly (in Newtons);

g is the acceleration due to gravity (= 10 m/s^2);

G_s is the mass of the swinging assembly (in kilograms);

G_n is in accordance with A.2.2a);

n is the number of users on the swing in accordance with A.2.6.1.

C_h, C_v, C_r are load factors depending on the maximum swing angle $\alpha_{max.}$ and the swing angle α of the considered position according to Table B.1.

The mass of the swinging assembly consists of the mass of the swinging platform and half of the mass of the cables, ropes or rods.

The specific load for swing seats is a variable load that contains the self weight (normally to be considered as a permanent load) of the swinging assembly. The effect resulting from the difference in load factors for permanent and variable load (see B.2) is not significant in this case.

F_h, F_v, and F_r, shall be treated as variable loads.

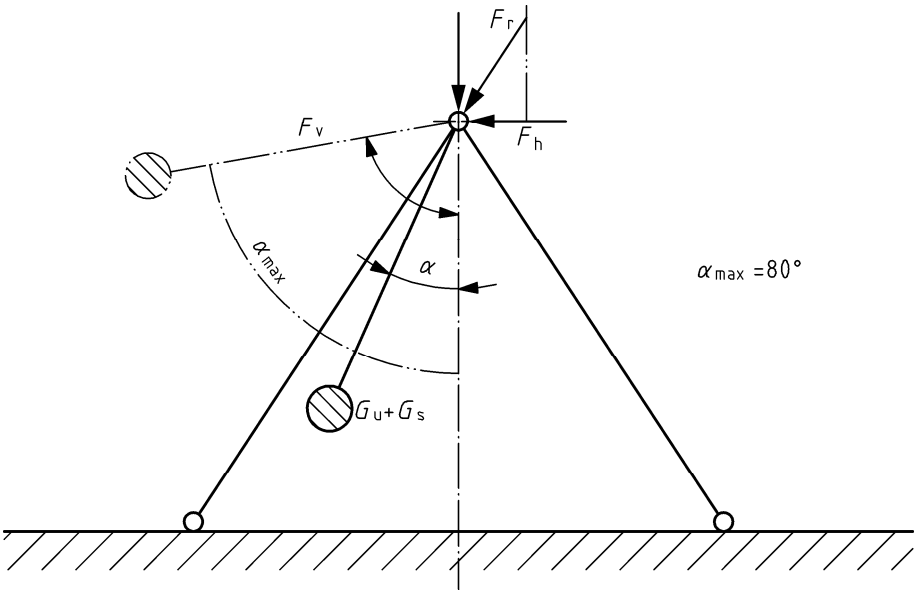

Figure B.2 — Loads acting on swing

Table B.1 — Load factors for swings

α_{max} = 80°			
α	C_r	C_v	C_h
80°	0,174	0,030	0,171
70°	0,679	0,232	0,638
60°	1,153	0,577	0,999
50°	1,581	1,016	1,211
42,6°	1,950	1,494	1,253
30°	2,251	1,949	1,126
20°	2,472	2,323	0,845
10°	2,607	2,567	0,453
0°	2,653	2,653	0,000

B.5 Worked examples for forces acting on a swing (without safety factors)

Swinging platform

The swinging platform consists of a rubber tyre with an infill steel wire net, which is suspended from four chains (see Figure B.3).

Diameter: 1,0 m

Weight of tyre and net: 50 kg

Weight of chains: 10 kg

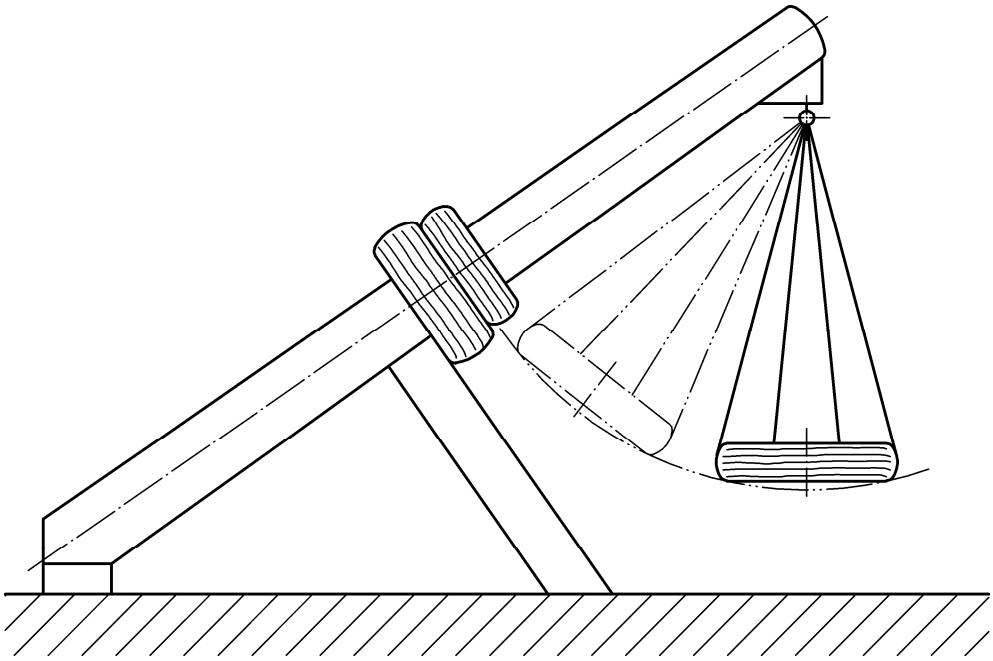

Figure B.3 — Example of a single point swing

Calculation:

Mass of the swinging assembly:

G_s = 50 + (½ × 10) = 55 kg.

Outer circumference of the swinging platform:

$L = \pi \times D$ = 3,14 × 1,0 = 3,14 m.

Number of users:

$n = L/0{,}6$ = 3,14/0,6 = 5,23 Rounding off: n = 6.

Mass of n users (see Equation A.1):

$G_n = n \times m + 1{,}64 \times \sigma \sqrt{n}$ = 6 × 53,8 + 1,64 × 9,6 × √6 = 361 kg.

Maximum swing angle $a_{max.}$:

The swinging platform is suspended from chains; therefore

$a_{max.}$ = 80°.

The maximum force in the chains is reached when the resulting force, F_r, is at maximum value (see Equation B.5).

For a = 0°, the load factor for resulting force is maximum:

C_r = 2,653;

$F_{chains} = C_r \times g \times (G_n + G_s)$ = 2,653 × 10 × (361 + 55) = 11 036 N.

The maximum vertical force on the assembly is reached when the load factor C_v reaches a maximum (see Equation B.4).

For a = 0°, the load factor C_v= 2,653.

$F_v = C_v$ x g x ($G_n + G_s$) = 2,653 x 10 x (361 + 55) = 11 036 N.

The load factor for the horizontal load, acting at the same time, is:

C_h= 0;

F_h = 0 N.

The maximum horizontal force on the assembly is reached when the load factor C_h reaches a maximum (see Equation B.3).

For a = 42,6°, the load factor C_h = 1,260.

$F_h = C_h \times g \times (G_n + G_s)$ = 1,260 × 10 × (361 + 55) = 5 242 N.

The load factor for the vertical load, acting at the same time, (see Equation B.4) is C_v = 1,372.

$F_v = C_v \times g \times (G_n + C_s)$ = 1,372 × 10 × (361 + 55) = 5 708 N.

B.6 Calculation of forces acting on the cable of a cableway

The maximum tensile force in the cable of a cableway is calculated below. The deflection of the cable is assumed to be linear (along straight lines)

No calculation is necessary when Table B.2 is used.

Calculate half of the cable mass from the Equation (B.6)

$$G_c = 1/2\, g_c\, l_c \qquad \text{(B.6)}$$

where

G_c is half of the cable mass in kilograms;

U_0 is the static initial deflection of the cable due to the self weight of the cable and the rolling assembly ($G_c + G_r$) in metres (see Figure B.4);

u is the dynamic deflection of the cable under a swinging mass ($G_c + G_r + G_n$) in metres (see Figure B.4);

g_c is the mass of the cable per metre in kilograms;

l_c is the suspended length of the cableway in metres;

G_r is the mass of the rolling assembly in kilograms;

G_n is the mass of n users in accordance with A.2.2 a);

n is the number of users. (For a traditional cableway, n = 2).

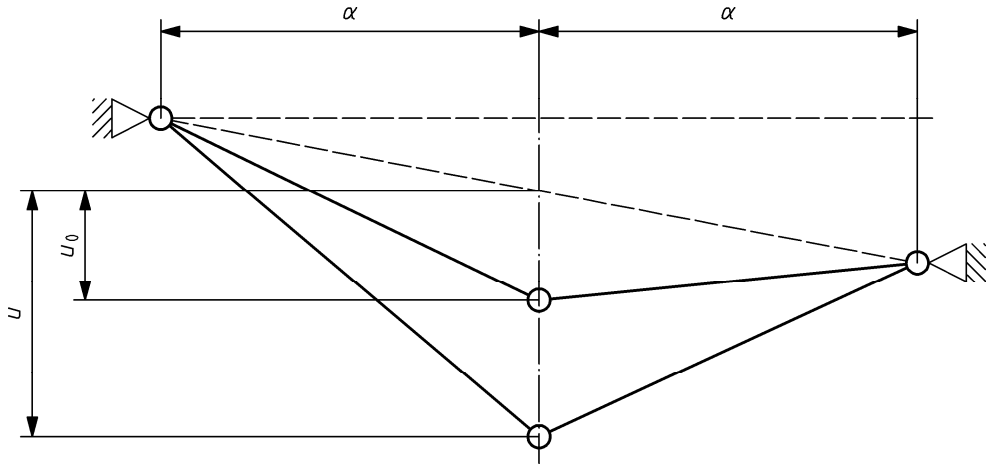

Figure B.4 — Deflection of a cableway

NOTE 1 A small value of the static initial deflection, u_0, leads to high tension in the cable and consequently to high forces on the supports and foundation. Moderate temperature effects can no longer be neglected since they can cause a significant change in the tension of the cable. Little deflection results in little reduction of the rolling speed near the end of the cable, which can cause additional hazards.

The total tension T_{tot} in the cable can be calculated from:

$$T_{tot} = T_{pr} + T \quad \text{(B.7)}$$

where

T_{tot} is the maximum tension in the cable in Newtons;

T_{pr} is the static cable tension due to self weight of the cable and roller and pre-tensioning in Newtons;

T is the tension in the cable caused by the users in Newtons.

Calculate the pre-tensioning of the cable from:

$$T_{pr} = (G_c + G_r) \times g/2\,\alpha \quad \text{(B.8)}$$

where

g is the acceleration due to gravity (= 10 m/s^2);

α is the relative initial deflection = $u_0/(1/2\ l_c)$; (B.9)

where

u_0 is the static defection in the middle of the cable due to self weight, weight of the rolling assembly and pre-tension.

NOTE 2 After some time, the initial deflection, u_o, can become bigger due to stretching of the cable. This will decrease the maximum tension in the cable (which is safe).

Calculate the cable tension caused by the users from:

$$T = ½ (p^2 - \alpha^2) E_c A_c \quad \text{(B.10)}$$

where

E_c is the elasticity of the cable in Newtons per millimetre squared;

A_c is the nett cross-sectional area of the cable in square millimetres;

p is the relative maximum dynamic deflection = $u/(½\, l_c)$, find the value for p that satisfies the relation:

$$p^3 + \alpha\, p^2 + (4\, \beta - \alpha^2)\, p + 4\, \alpha\, \beta - \alpha^3 - C = 0 \quad \text{(B.11)}$$

where

β is the pre-strain = $T_{pr}/(E_c A_c)$; (B.12)

C is a constant = $4\,(G_c + G_r + G_n) \times g/(E_c A_c)$. (B.13)

NOTE 3 A safe value for p can be found from:

$$p = \sqrt[3]{(\alpha\, \beta - \alpha^3 - C)} \quad \text{(B.14)}$$

B.7 Worked example for forces acting on a cableway (without safety factors)

Data:

Cableway:

length:	60 m
static initial deflection:	1 % of span
Cable:	6 x 36 WS steel core strand
nominal diameter:	12 mm
mass:	0,602 kg/m
nett steel area:	66,24 mm^2
elasticity:	105 000 N/mm^2
ultimate load:	101 kN

Roller:

mass: 10 kg

Users:
mass of two children: 130 kg

Calculation
Static deflection (see Figure B.4):

u_0 = 0,01 × 60 = 0,6 m.

Relative initial deflection (see Equation B.9):

$\alpha = u_0/(½\ l_c)$ = 0,6/(½ × 60) = 0,02.

Half of cable mass (see Equation B.6):

G_c = ½ $g_c\ l_c$ = ½ × 0,602 × 60 = 18 kg.

Mass of the rolling assembly:

G_r = 10 kg.

Mass of two children:

G_n= 130 kg.

Pre-tension of the cable (see Equation B.8):

$T_{pr} = (G_c + G_r) \times g/2\ \alpha$ = (18 + 10) × 10/(2 × 0,02) = 7 000 N.

Pre-strain (see Equation B.12):

$\beta = T_{pr}/(E_c\ A_c)$ = 7 000/(105 000 × 66,24) = 0,001 006 44.

Constant (see Equation B.13):

$C = 4\ (G_c + G_r + G_n) \times g/(E_c\ A_c)$ = 4 (18 + 10 + 130) × 10/(105 000 × 66,24) = 0,000 908 67.

Equation B.11 should be solved as follows:

$$p^3 + \alpha\ p^2 + (4\ \beta - \alpha^2)\ p + 4\ \alpha\ \beta - \alpha^3 - C = 0\ ;$$

$$p^3 + 0{,}02\ p^2 + 0{,}003\ 625\ 8\ p - 0{,}000\ 836\ 154\ 8 = 0\ .$$

The value of p that satisfies the above equation is:

p = 0,076 25.

Now the additional dynamic tension (see Equation B.10) can be calculated:

$$T = ½\ (p^2 - \alpha^2)\ E_c\ A_c = ½\ (0{,}076\ 252 - 0{,}022) \times 105\ 000 \times 66{,}24 = 18\ 828\ \text{N}\ .$$

The total tension T_{tot} in the cable (see Equation B.7) is:

$$T_{tot} = T_{pr} + T = 7\,000 + 18\,828 = 25\,828 \text{ N}$$

In Table B.2, the maximum tensile cable forces are calculated for a number of cases. The table may be used in all cases where:

— mass of the cable: ≤ 0,75 kg/m;

— elasticity of the cable: ≤ 110 000 N/mm^2;

— nett cable area: ≤ 80 mm^2;

— mass of the rolling assembly : ≤ 25 kg;

— mass of the users: ≤ 130 kg.

Table B.2 — Maximum dynamic tensile cable force in kN

Span	Initial deflection				
m	1 %	2 %	3 %	4 %	5 %
20	28,0	23,6	19,5	16,2	13,6
30	28,3	23,8	19,7	16,4	13,8
40	28,6	24,1	20,0	16,6	14,0
50	29,0	24,3	20,0	16,8	14,1
60	29,3	24,6	20,4	17,0	14,3

Annex C
(normative)

Physical testing of structural integrity

C.1 Pass/fail criteria

C.1.1 Load carrying ability

The specimen shall be able to carry the total test load (see C.2) for 5 min.

C.1.2 Failure

After the test the specimen shall show no cracks, damage or excessive permanent deformation and no connections shall be loosened.

Permanent deformation is considered to be excessive when it creates an infringement of any other requirement of this standard.

C.2 Test load for equipment

C.2.1 Load combinations for testing

The following load combinations shall be used for testing:

$$\gamma_{G;t} \times G + \gamma_{Q;t} \times Q_i \qquad \text{(C.2)}$$

where

G is the permanent load as given in A.1;

Q_i is one of the variable loads as given in A.2.2 to A.2.6;

$\gamma_{G;t}$ is a partial safety factor for permanent loads to be used in testing (with a value of 1,0 in all cases);

$\gamma_{Q;t}$ is a partial safety factor for variable loads to be used in testing in accordance with C.2.2 or C.2.3.

It is not necessary to combine independent variable loads, such as wind and user loads, but related loads acting in different directions, such as vertical and horizontal user loads, should be combined.

Permanent loads are present during the test. Compared with the variable loads on playground equipment, the permanent loads are small in most cases, and therefore no additional safety factor for permanent loads is required in the tests.

C.2.2 Safety factor for tests on identical series

The following safety factor shall be used for identical series where not every specimen is tested:

$\gamma_{Q;t}$ = 0 for favourable effects;

$\gamma_{Q;t}$ = 2,0 for unfavourable effects.

C.2.3 Safety factor for tests on a unique product

The following safety factor shall be used where every specimen, including unique products, is tested:

$\gamma_{Q;t}$ = 0 for favourable effects;

$\gamma_{Q;t}$ = 1,35 for unfavourable effects.

C.3 Load application

C.3.1 Point loads

The following dimensions shall not be exceeded when applying the loads onto an element of the structure:

— line type element: $l \leq$ 0,1 m;

— area type element: $a \leq$ 0,1 m × 0,1 m.

where

l is the support length of the test load (in metres);

a is the support area of the test load (in metres).

To simulate the transfer of load caused by one user to the structure, the load should normally be applied over a length of not more than 0,1 m.

C.3.2 Line loads

Line loads can be represented by equally distributed point loads spaced not more than 0,6 m apart. The support length under the point loads may be up to 0,6 m.

C.3.3 Area loads

Area loads can be represented by equally distributed point loads spaced grid wise not more than 0,6 m × 0,6 m apart.

The support area under the point loads shall be less than 0,6 m × 0,6 m.

C.4 Test report

The test report shall be prepared in accordance with EN ISO/IEC 17025 and shall include the number and date of this part of EN 1176.

Annex D
(normative)

Test methods for entrapment

D.1 General

Unless stated otherwise, tolerances of the probes in this Annex are as follows:

a) ± 1 mm for dimensions; and

b) ± 1° for angles.

In situations of doubt when using the probes relating to the tolerance an accurate measurement should be made to ensure the opening is in accordance with the nominal dimension of the probe.

All tests shall be performed in the most onerous way.

D.2 Head and neck entrapment

D.2.1 Completely bound openings

D.2.1.1 Apparatus

Probes, as illustrated in Figure D.1.

Dimensions in millimetres

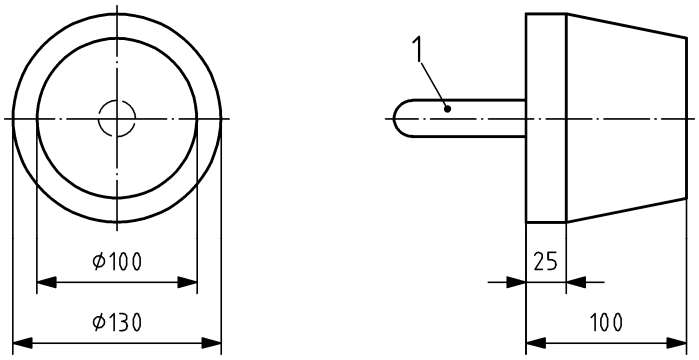

a) Probe E (small head)

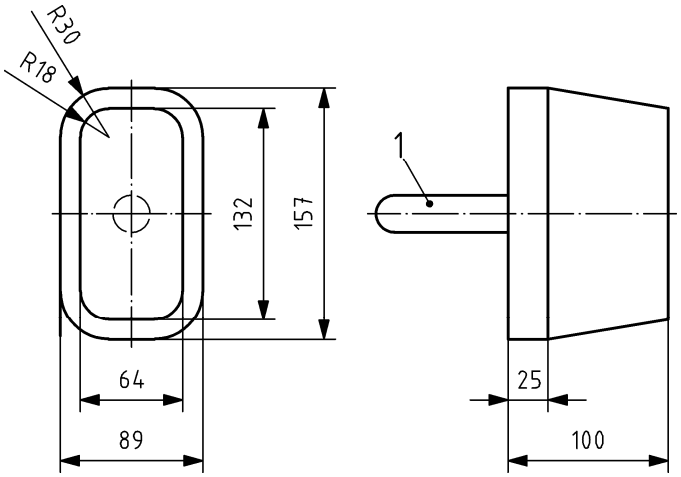

b) Probe C (torso)

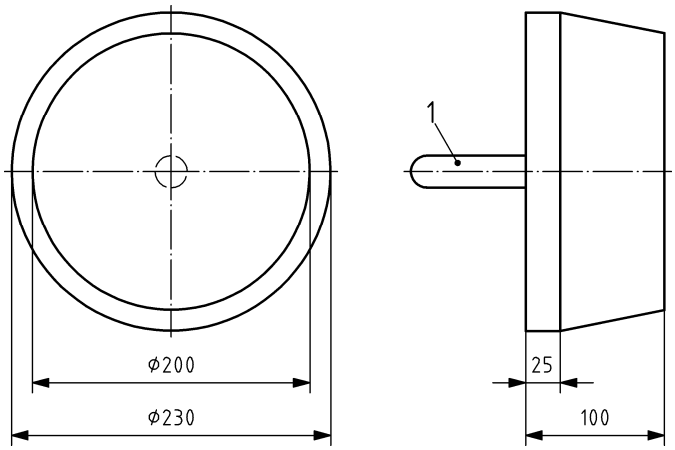

c) Probe D (large head)

Key

1 handle

Figure D.1 — Probes for determination of head and neck entrapment in completely bound openings

D.2.1.2 Procedure

Apply successively the probes as illustrated in Figure D.1 to each relevant opening. Record and report the passage of any probe through the opening. If any of the probes are not freely passing through the opening apply a force of (222 ± 5) N to the probe. When the torso probe is used, it is safer to force the body through the opening first because if the body passes through then the head will also pass through. Apply the probe with the axis perpendicular to the plane of the opening.

NOTE The head probe dimensions are based on those for an older child and, therefore, there will be a large tolerance if assessing equipment for use by a young child.

D.2.2 Partially bound and V-shaped openings

D.2.2.1 Apparatus

Test template, as illustrated in Figure D.2.

Dimensions in millimetres

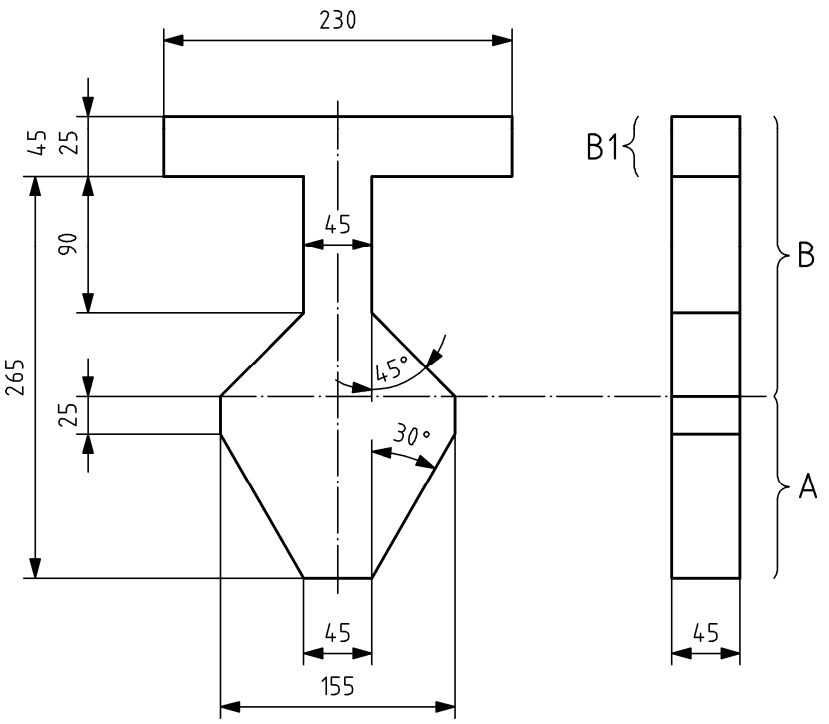

Key
A "A" portion of probe
B "B" portion of probe
B1 shoulder section

Figure D.2 — Test template for assessment of head and neck entrapment in partially bound and V-shaped openings

D.2.2.2 Procedure

Position the ‘B’ portion of the test template between and perpendicular to the boundaries of the opening, as shown in Figure D.3. Record and report whether the template fits within the boundaries of the opening or if it cannot be inserted to its full thickness.

If the test template can be inserted to a depth greater than the thickness of the template (45 mm), apply the ‘A’ portion of the test template, so that its centre line is orientated to check the extremities of the opening as well as the centreline.

Ensure that the plane of the test template is parallel and applied in line with the opening, as shown in Figure D.4.

Insert the test template along the opening until its motion is arrested by contact with the boundaries of the opening. Record and report the results including the angle of the template centreline relative to the vertical and horizontal axes (see Figure D.4) as this will determine the pass/fail requirements given in 4.2.7.2. See Figures D.5 and D.6 for examples of the assessment for the different angular ranges.

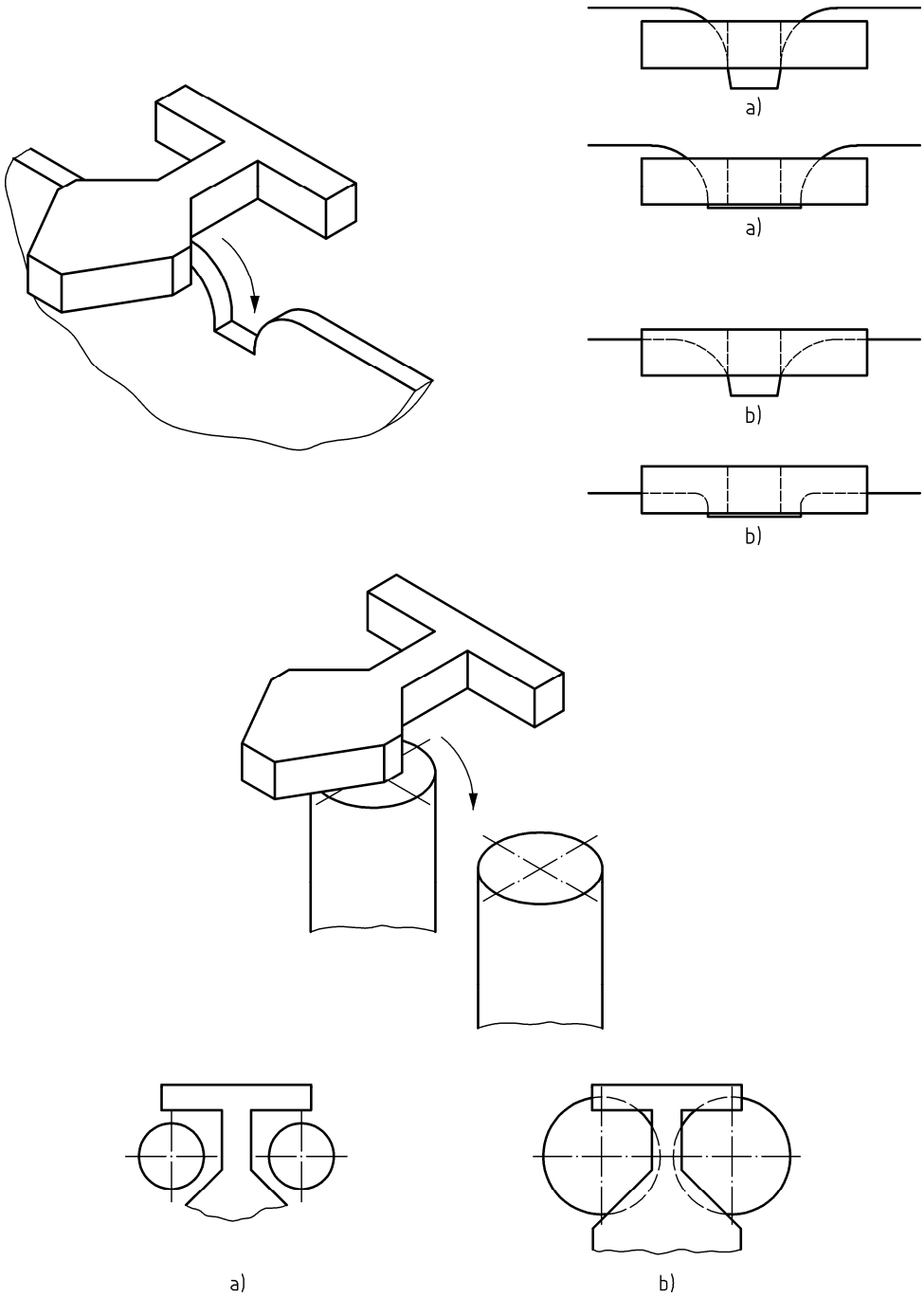

a accessible

b not accessible

Figure D.3 — Method of insertion of the "B" portion of the test template

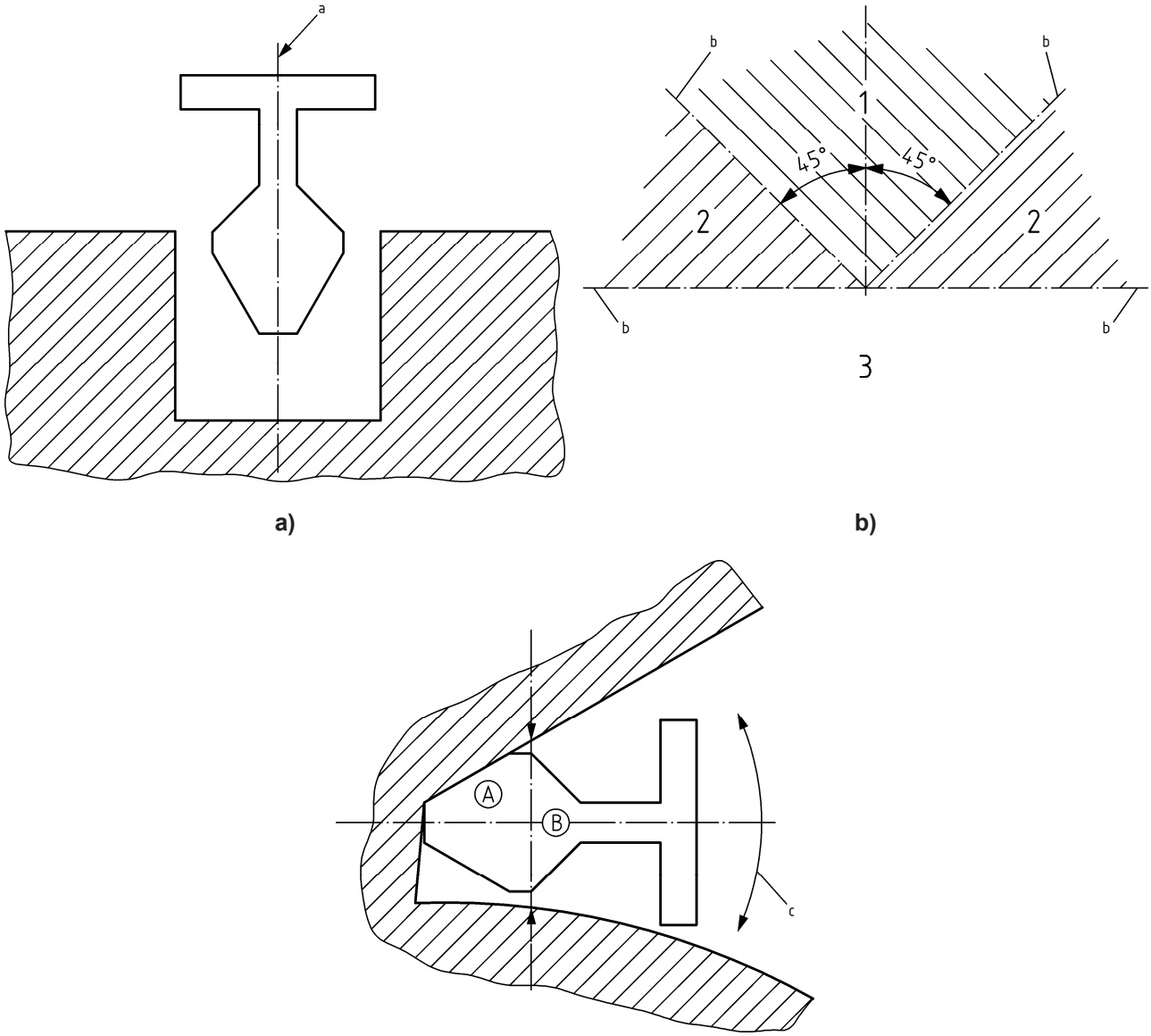

Key

1 Range 1
2 Range 2
3 Range 3
[a] Insertion angle for assessing the range
[b] Template centre line
[c] Check all insertion angles

Figure D.4 — Checking all insertion angles to determine range

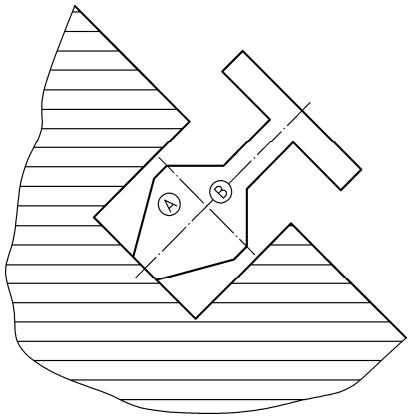

a) Passes if front section fully enters aperture to a maximum depth of (template shoulder depth) 265 mm

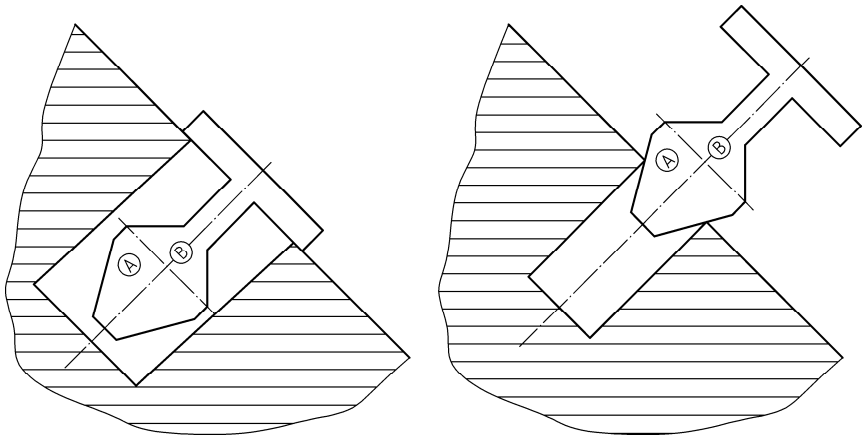

b) Fail

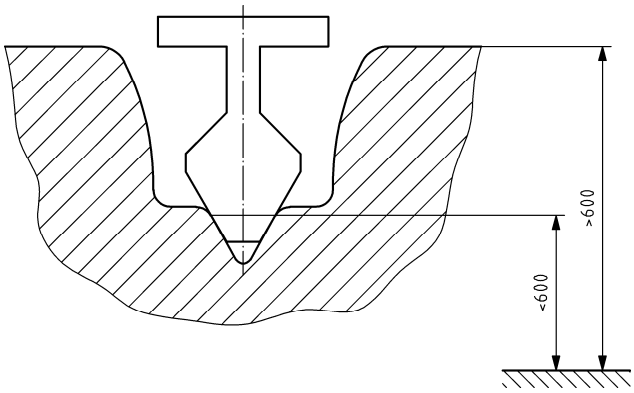

c) Pass

Key

> 600 mm = more than 600 mm above the playing surface

< 600 mm = less than 600 mm above the playing surface

Figure D.5 — Range 1 method of insertion of the 'A' portion of the test template

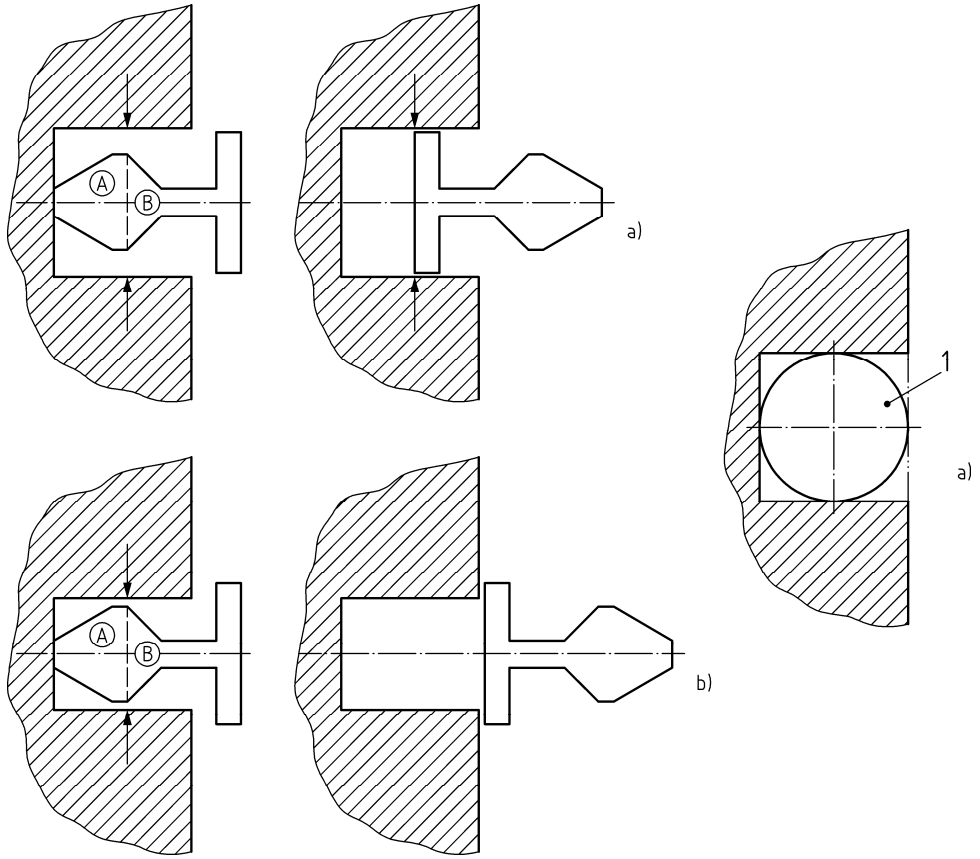

Key

a) pass

b) fail

1 large head probe D

Figure D.6 — Range 2 method of insertion of the 'A' portion of the test template followed by insertion of the shoulder of the template or probe D

D.3 Entrapment of clothing (Toggle test)

D.3.1 Apparatus

Test device, as shown in Figure D.7 a), comprising:

— toggle, as shown in Figure D.7 b), made of polyamides (PA) (e.g. nylon), polytetrafluoroethylene (PTFE), which have been found to be suitable materials;

— chain, as shown in Figure D.7 c);

— collar, detachable and with good slip;

— pole.

Dimensions in millimetres

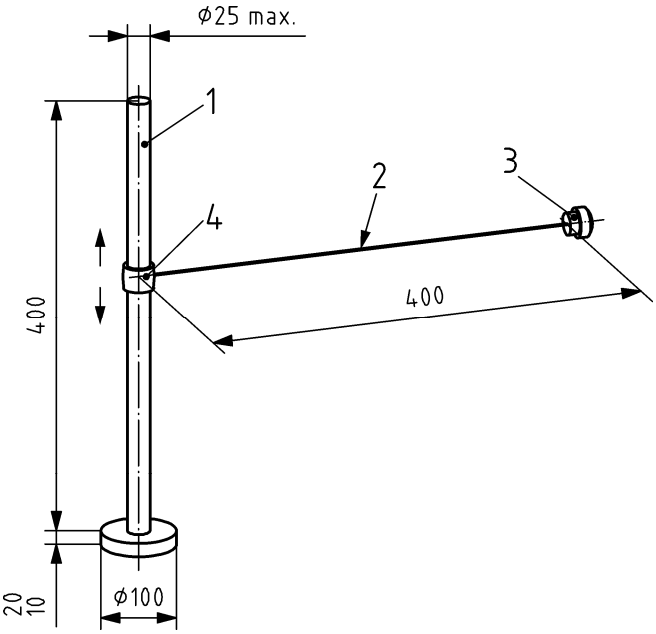

a) **Complete test device**

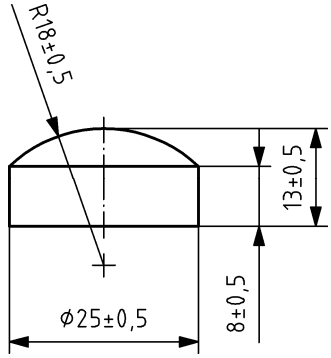

b) **Toggle**

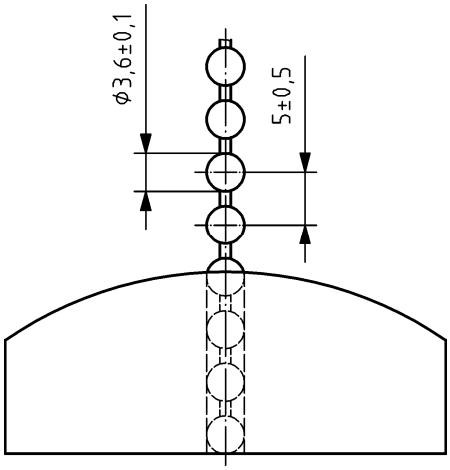

c) **Chain**

Key

1 pole
2 chain
3 toggle
4 collar

Figure D.7 — Test device

D.3.2 Procedure

D.3.2.1 Slides

Position the test device perpendicularly in the starting section of the slide, 200 mm from the transition point of the starting section, and at the appropriate lateral location, as shown in Figure D.8.

Randomly place the toggle and chain under the action of its own weight to all positions within range, without applying additional force or influence.

NOTE The objective of this test is to replicate the natural motion of a clothing toggle.

In the event that the test device is obstructed, apply a maximum force of 50 N in the direction of the forced movement. If the device is released this position within the equipment passes the test.

Record and report where any entrapment of the toggle or chain occurs.

Dimensions in millimetres

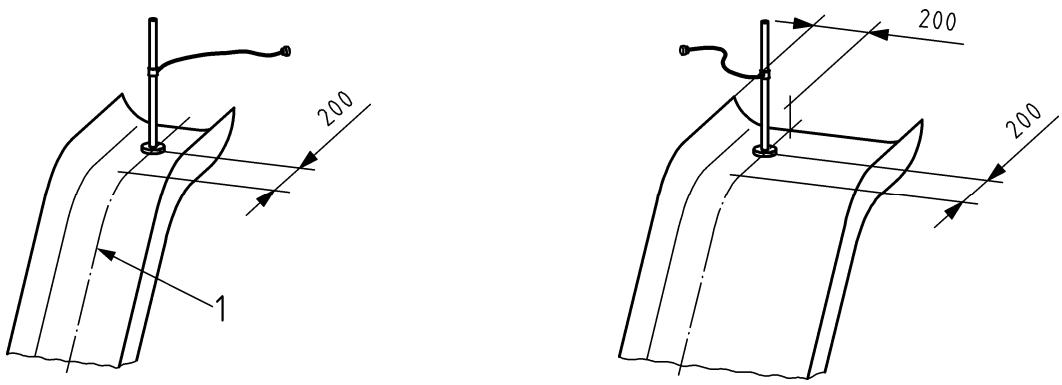

a) Narrow slide **b) Wide slide**

Key
1 centre line

Figure D.8 — Position of the test device on slides

D.3.2.2 Fireman's poles

Conduct the test with two different positions of the test device in accordance with a) and b):

a) complete test device (see Figure D.7a)):

Position the test device vertically at the edge of the platform at the point closest to the fireman's pole.

b) toggle/chain:

Detach the toggle/chain from the complete device and position so that it is at a point 1,8 m above the surface of the adjacent platform or the highest point on the pole, if it extends less than 1,8 m, (see Figure D.9).

Randomly place the toggle and chain under the action of its own weight to all positions within range, without applying additional force or influence, using the test device as given in a) and then as given in b).

NOTE The objective of this test is to replicate the natural motion of a clothing toggle.

In the event that the test device is obstructed, apply a maximum force of 50 N in the direction of the forced movement. If the device is released, this position within the equipment passes the test.

Repeat the test as given in b) for the entire length of the fireman's pole, down to the point 1,2 m above ground level.

Record and report where any entrapment of the toggle or chain occurs.

Dimensions in millimetres

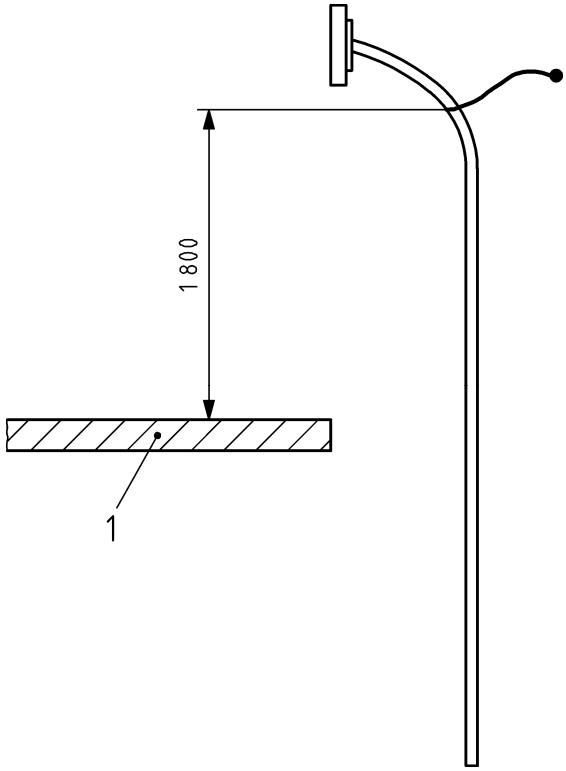

Key
1 starting platform

Figure D.9 — Position of the test device on fireman's poles

D.3.2.3 Roofs

Detach the toggle, chain and collar from the pole of the complete test device (see D.3.1). Randomly place the toggle and chain under the action of its own weight to all positions at the apex or along the surface of the roof without applying additional force or influence.

If the toggle or the chain resists removal, apply a maximum force of 50 N in the direction of any potential sliding movement of the user. If the toggle and the chain are released, this position within the equipment passes the test.

Record and report where any entrapment of the toggle or chain occurs.

D.4 Finger entrapment

D.4.1 Apparatus

Finger rods, as illustrated in Figure D.10.

Dimensions in millimetres

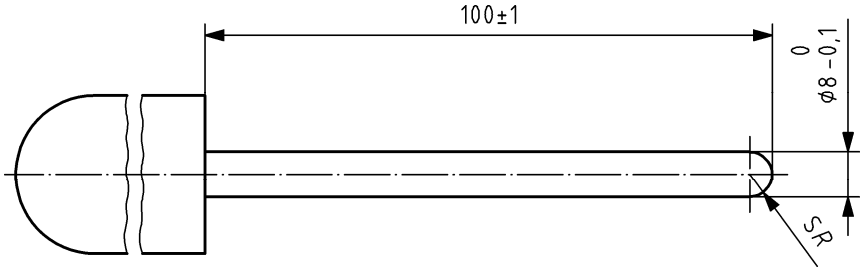

a)

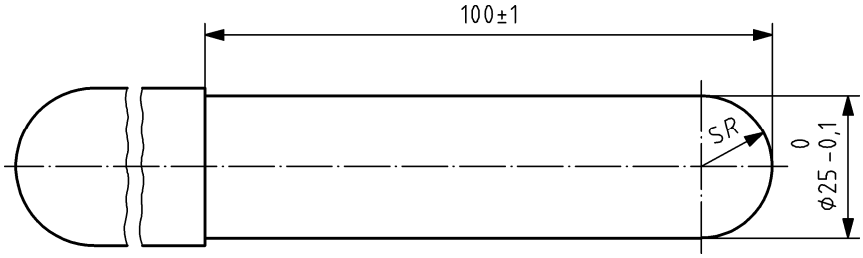

b)

Key

SR spherical radius

Figure D.10 — Finger rods

D.4.2 Procedure

Apply the 8 mm diameter finger rod to the minimum cross section of the opening and, if the rod does not pass through, rotate it as illustrated in Figure D.11.

Record and report if the rod enters the opening and if it locks in any position when moved through the conical arc shown in Figure D.11.

If the 8 mm diameter finger rod passes through the opening, apply the 25 mm diameter finger rod.

Record and report if the 25 mm diameter finger rod passes through the opening and, if it does, whether access is then given to another finger entrapment site.

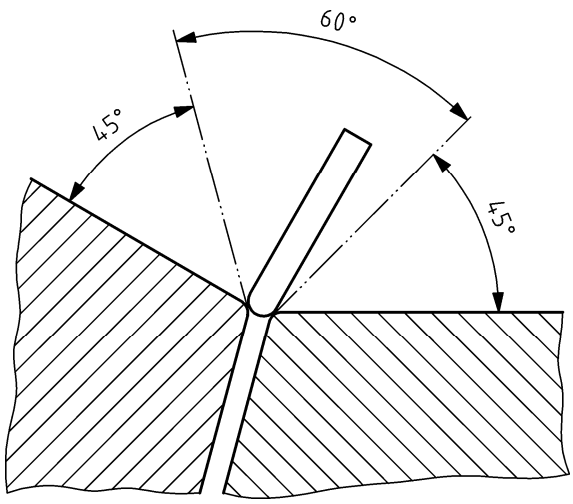

Figure D.11 — Rotation of the 8 mm diameter finger rod

Annex E
(informative)

Overview of possible entrapment situations

Table E.1

		1	2	3	4	5	6
		Completely bound openings		Partially bound openings	V-shapes	Protrusions	Moving parts of equipment
		Rigid	Non-rigid				
A	Whole body	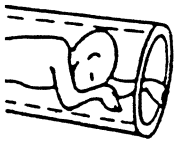					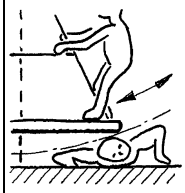
B	Head/neck head first		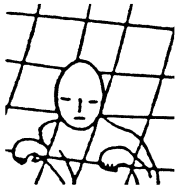	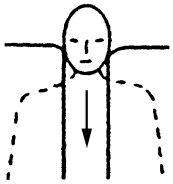			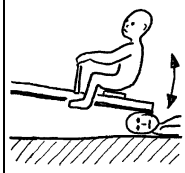
C	Head/neck feet first	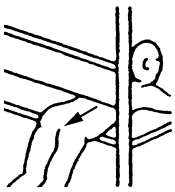					
D	Arm and hand				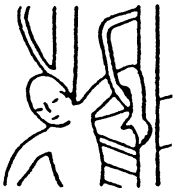		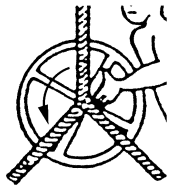
E	Leg and foot	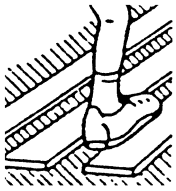			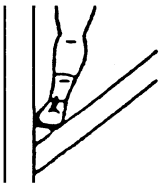		

Table E.1 *(continued)*

		1	2	3	4	5	6
		Completely bound openings		Partially bound openings	V-shapes	Protrusions	Moving parts of equipment
		Rigid	Non-rigid				
F	Finger	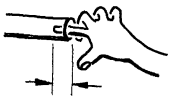	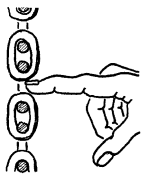	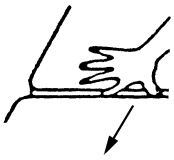	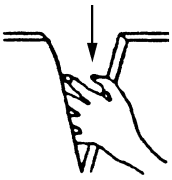		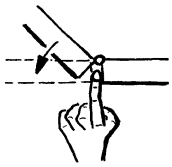
G	Clothing			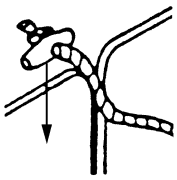	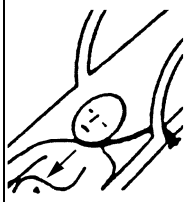	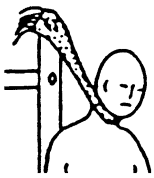	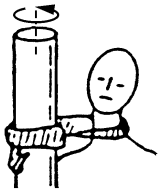
H	Hair						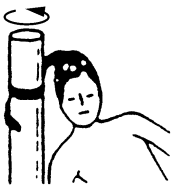

Annex F
(informative)

A–deviations

F.1 General

A-deviation: National deviation due to regulations, the alteration of which is for the time being outside the competence of the CEN/CENELEC national member.

This European Standard does not fall under any Directive of the EU. In the relevant CEN/ CENELEC countries these A-deviations are valid instead of the provisions of the European Standard until they have been removed.

F.2 France

National Regulation Decree no. 96-1136 of 18 December 1996 specifying the safety requirements for community playgrounds	
Sub-clause 4.2.8.5.3 The requirements of sub-clause 4.2.8.5.3 must not enable in France the installation of the equipment concerned on a surface that does not have impact-attenuating properties, for example bitumen, concrete, macadam, bricks or stones.	Annex II, 3, a) This part of the decree indicates that “the surfaces onto which children are liable to fall when using the equipment must be covered in suitable impact-absorbing materials”.

F.3 Germany

F.3.1 General

In Germany, the following deviations from this standard are binding:

F.3.2 Children less than 3 years

In Germany the parents' obligatory supervision of the children is laid down in the German Code of Civil Law (BGB) § 1631 paragraph 1.

All requirements regarding children below 3 years of age, which are replaced in this edition by "easily accessible" (e.g. in the note in 4.2.1, in the note in 4.2.9.5, in Figure 8 a), in 4.2.4.3, in 4.2.4.4, in 4.2.9.3 and in 4.2.9.5) are not valid for Germany due to the legally based responsibility to supervise children also on playgrounds.

In order to ensure safe design and safety-related inspection of playground equipment, especially manufactured for Germany, the probes A and B shown in Figure F.1 and their application as described in D.2.1.2 remain valid.

Dimensions in millimetres

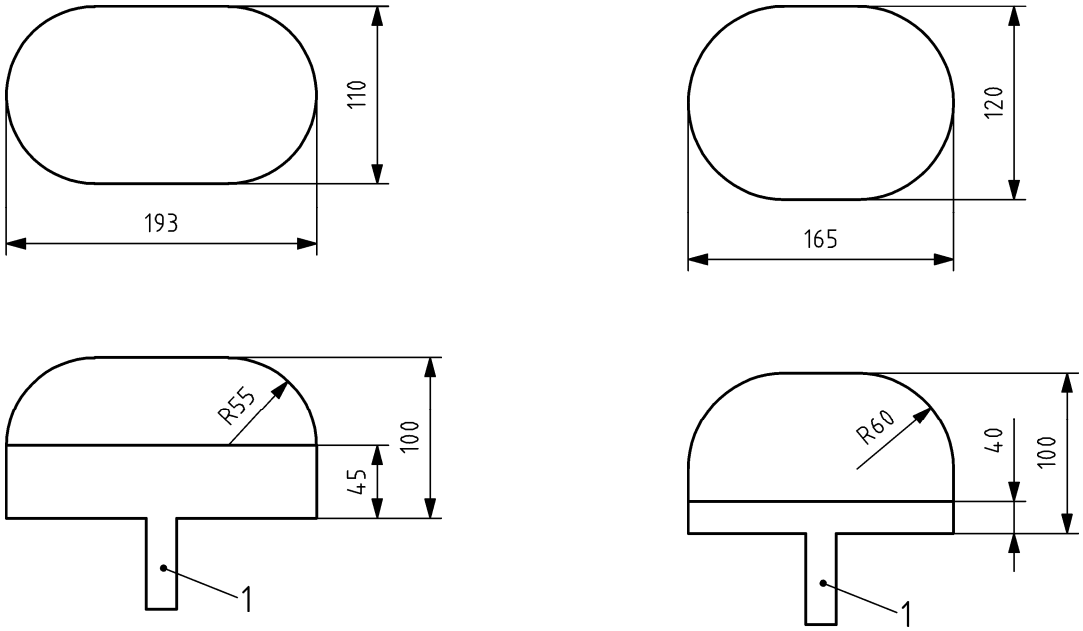

a) Probe A **b) Probe B**

Figure F.1 — Probes

F.3.3 Impact attenuating surfaces

The requirements of the surfacing in the safety area of playground equipment and their allocation to falling heights are given by German national law:

1) Playgrounds as structural works are subject to the German building code. The individual configuration of structural works can only be effected by German national standards;

2) The law for safety of equipment and products ((Artikel 1 Gesetz über technische Arbeitsmittel und Verbraucherprodukte (Geräte- und Produktsicherheitsgesetz - GPSG));

3) Specifications of the legal accident insurances (GUV).

They shall thus be maintained as given in Table F.1.

The allocation of the surfacing to the free heights of fall is no barrier to trade.

In Germany therefore Table F.1 is valid instead of Table 4.

Table F.1 — Materials in dependence of permissible free heights of fall

No.	Material[a]	Description	Minimum layer thicknesses[b] mm	Maximum height of fall mm
01	concrete/stone			≤ 0600
02	bituminous surfacing			≤ 0600
03	topsoil			≤ 1 000
04	turf			≤ 1 500 [d]
05	bark	20 mm to 80 mm grain size broken bark of conifers	200	≤ 2 000
			300	≤ 3 000
6	wood chips	5 mm to 30 mm grain size mechanically broken wood (no wood based materials) without bark and leaf components	200	≤ 2 000
			300	≤ 3 000
07	sand [c]	0,2 mm to 2 mm grain size	200	≤ 2 000
			300	≤ 3 000
08	gravel [c]	2 mm to 8 mm grain size	200	≤ 2 000
			300	≤ 3 000
9	Other materials or other thicknesses	as tested to HIC (see EN 1177)		Critical fall height as tested

[a] Materials properly prepared for use in children's playgrounds

[b] For loose particulate material, add 100 mm to the minimum depth to compensate for displacement (see 4.2.8.5.1)

[c] No silty or clay particles. Grain size can be identified by use of a sieve test, such as EN 933-1

[d] See NOTE 1 in 4.2.8.5.2

Bibliography

[1] EN 71 (all parts), Safety of toys

[2] EN 933-1, *Tests for geometrical properties of aggregates – Part 1: Determination of particle size distribution – Sieving method*

[3] EN 12572 (all parts), Artificial climbing

[4] Council Directive 76/769/EEC of 27 July 1976 on the approximation of the laws, regulations and administrative provisions of the Member States relating to restrictions on the marketing and use of certain dangerous substances and preparations

[5] Directive 2001/95/EC of the European Parliament and of the Council of 3 December 2001 on general product safety

blank

British Standards Institution (BSI)

BSI is the independent national body responsible for preparing British Standards. It presents the UK view on standards in Europe and at the international level. It is incorporated by Royal Charter.

Revisions

British Standards are updated by amendment or revision. Users of British Standards should make sure that they possess the latest amendments or editions.

It is the constant aim of BSI to improve the quality of our products and services. We would be grateful if anyone finding an inaccuracy or ambiguity while using this British Standard would inform the Secretary of the technical committee responsible, the identity of which can be found on the inside front cover.
Tel: +44 (0)20 8996 9000 Fax: +44 (0)20 8996 7400

BSI offers members an individual updating service called PLUS which ensures that subscribers automatically receive the latest editions of standards.

Buying standards

Orders for all BSI, international and foreign standards publications should be addressed to Customer Services.
Tel: +44 (0)20 8996 9001 Fax: +44 (0)20 8996 7001
Email: orders@bsigroup.com

You may also buy directly using a debit/credit card from the BSI Shop on the Website http://www.bsigroup.com/shop.

In response to orders for international standards, it is BSI policy to supply the BSI implementation of those that have been published as British Standards, unless otherwise requested.

Information on standards

BSI provides a wide range of information on national, European and international standards through its Library and its Technical Help to Exporters Service. Various BSI electronic information services are also available which give details on all its products and services. Contact the Information Centre.
Tel: +44 (0)20 8996 7111 Fax: +44 (0)20 8996 7048
Email: info@bsigroup.com

Subscribing members of BSI are kept up to date with standards developments and receive substantial discounts on the purchase price of standards. For details of these and other benefits contact Membership Administration.
Tel: +44 (0)20 8996 7002 Fax: +44 (0)20 8996 7001
Email: membership@bsigroup.com

Information regarding online access to British Standards via British Standards Online can be found at http://www.bsigroup.com/BSOL.

Further information about BSI is available on the BSI website at http://www.bsigroup.com.

Copyright

BSI Group Headquarters
389 Chiswick High Road,
London W4 4AL, UK
Tel +44 (0)20 8996 9001
Fax +44 (0)20 8996 7001
www.bsigroup.com/standards